OCTOBER 2018 | VERSION 1

TECHNICAL MANUAL MY2020

NuVinci OPTIMIZED™

enviolo

The Moving Standard for

City
Trekking
Sportive
Cargo
Commercial

bikes.

Table of Contents

1	**General Information**	**3**
1.1	Vision	3
1.2	The NuVinci Optimized™ Technology	4
1.3	System Overview	5
2	**Component Specifications**	**7**
2.1	Internal Gear Hubs	8
2.2	Minimum sprocket ratios	11
2.3	Controllers	13
2.4	Automatic Interfaces	14
2.5	Compatibility Matrix	15
3.1	**Frame Requirements**	**16**
3.1	Mechanical Frame Requirements	17
3.1.1	Dropouts	17
3.1.2	Cable Routing	17
3.2	**Manual Required Package Space**	**18**
3.2.1	City, Trekking, Commercial	18
3.2.2	Cargo, 135 mm	19
3.2.3	enviolo Sportive Dropout Options	20
3.2.4	Sportive, 135 mm	21
3.2.5	Sportive, 142 mm	22
3.2.6	Sportive, 148 mm	23
3.2.7	Individual Components	24
3.3	**Automatic Required Package Space**	**25**
3.3.1	City, Trekking, Commercial	25
3.3.2	Cargo, 135 mm	26
3.3.4	Sportive, 135 mm	27
3.3.5	Sportive, 142 mm	28
3.3.6	Sportive, 148 mm	29
3.3.7	Individual Components	30
3.3.8	Wire Harness	31
4	**Gear and Sprocket Ratios**	**32**
4.1	Gear Ratios	33
4.2	Suggested Sprocket Ratios	33
4.3	Sprocket Ratio Restrictions	33
5	**Further Information**	**36**
5.1	System Efficiency	37
5.2	Service Tools	38
5.3	enviolo Automatic App	39
5.4	Overview of Tightening Torques	40
5.5	Quality & Validation	41
6	**Cooperation Partners**	**42**
6.1	Current Integration Partners	43
6.2	Compatible Belt Drive Systems	44
6.3	Compatible Chain Cases	45
6.4	Compatible Bicycle Trailers	50
7	**Certificates**	**52**
7.1	European Bicycle Standards Test Report	53
7.2	RoHS Declaration	54
7.3	Declaration of Conformity	55
7.4	Reach	56
8	**Support & Service**	**57**

enviolo

The Moving Standard.

enviolo is "The Moving Standard" for bicycles and eBikes today.

With our stepless and automatic shifting products incorporating the revolutionary NuVinci® technology, we elevate your riding experience and make it simpler, more fun, safer, and healthier.

Riding a bike with enviolo's stepless or automatic shifting solution means concentrating less on changing gears and more on what's important, for example: traffic, road hazards, passengers, or enjoying the beauty of your surroundings.

enviolo's stepless and automatic shifting benefits are now available in five different group sets. All group sets consist of a NuVinci Optimized™ transmission and controller, specifically designed for their use cases: city, trekking, sportive, cargo, and commercial.

During the design process of these new components, we focused on the unique needs of the five different rider personas and the type of bicycles they ride. This mission to deliver the best possible shifting solution for each rider enables us to be "The Moving Standard."

enviolo is a division of Fallbrook Technologies Inc. and until January 1, 2018, it was operating under the name "NuVinci® Cycling". The enviolo head office is located in Amsterdam, The Netherlands.

Simplicity is the ultimate sophistication.

Leonardo DaVinci

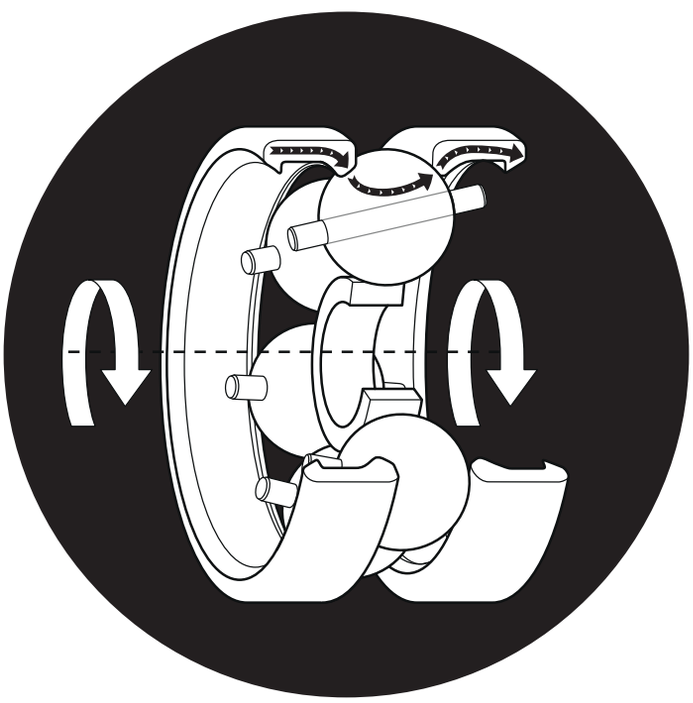

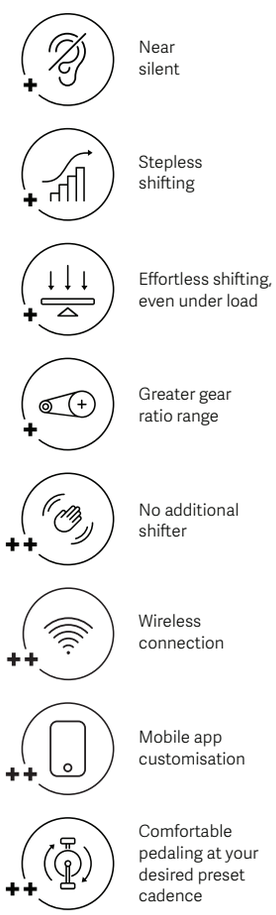

Stepless Manual Shifting:
As simple as adjusting the volume on a radio.

With our stepless manual technology, riders can effortlessly change their gear ratio, even under load. Thus we enable them to focus on the important aspects of their ride such as traffic or scenery. No more step changes, locked gears, empty pedaling, or creaking, just a unique ride feel created by the technology's ease of use.

The system enables low maintenance, long-lasting bikes, especially in a combination with a belt drive, the perfect fit for the new rider generation, focused on simplicity and comfort. Moreover, the technology can also be merged with powerful e-bike systems. The enviolo stepless manual technology was created based on use cases to serve specific rider needs, and consists of specifically designed internal gear hubs and matching controllers.

Stepless Automatic Shifting:
Why bother switching gears manually?

The stepless automatic technology takes the ride experience to the next level with its 'set it and forget it' approach. Cyclists only need to set up their desired cadence, and the stepless automatic technology will adjust the *NuVinci* Optimized system so that they can always pedal at the same pace, even up or down hill.

To be in line with the trend of 'integrated systems', the technology can also be merged into the e-bike's control unit, thus cleaning up the handlebar and simplifying the ride experience.

System Overview

enviolo MANUAL

City, Trekking, Sportive, Cargo, Commercial

CT

enviolo CT

TR

enviolo TR

SP

enviolo SP

CA

enviolo CA

CO

enviolo CO

System Overview

City, Trekking, Sportive, Cargo, Commercial

enviolo AUTOMATIC

* The 3-button controller is currently under evaluation.

Component Specifications

Our high-tech components, designed specifically for their use cases, offer unrivaled possibilities.

enviolo

Internal gear hub

enviolo CT

enviolo TR

	enviolo CT	enviolo TR
Colors	Matt black / dark grey	Matt black / dark grey
Weight	2450 g	2450 g
Max. speed RPM	800 RPM	800 RPM
Nominal ratio range	310% (0.55 - 1.7)	380% (0.5 - 1.90)
Max. continuous torque from the drive system	50 Nm*	75 Nm*
Max. peak torque from the drive system	80 Nm*	90 Nm*
Max. nominal power input from the drive system	250 W*	250 W*
Max. gross vehicle weight (rider + cargo + bike)	160 kg*	180 kg*
Lifetime	20,000 km	20,000 km
IP classification	Hub = IP65, freewheel = IP54, rear shifter = IP54	Hub = IP65, freewheel = IP54, rear shifter = IP54
Temperature range	-20°C to 48°C	-20°C to 48°C
Brake options	6-bolt disc/rim/roller	6-bolt disc/rim/roller
Max. brake disc rotor	180 mm	180 mm
Disc brake screw length requirements	10 - 17 mm	10 - 17 mm
Max. disc brake screw torque	Use disc brake manufacturers recommendation, but don´t exceed 6.2 Nm	Use disc brake manufacturers recommendation, but don´t exceed 6.2 Nm
Spoke options	32/36	32/36
Spoke size	2 mm - 2.34 mm	2 mm - 2.34 mm
Spoke flange diameter	125 mm	125 mm
Spoke hole diameter	2.9 mm	2.9 mm
Wheel size	Minimum 16"	Minimum 16"
Axle threads	M10 X 1	M10 X 1
Dropout width	135 mm	135 mm
Dropout thickness	6 - 10 mm	6 - 10 mm
Dropout length for no-turn washer engagement (measured from axle center)	Recommended 14 mm, minimum 10 mm	Recommended 14 mm, minimum 10 mm
Total axle width (without acorn nuts)	183 mm	183 mm
Chainline	49.0 +/- 0.5 mm	49.0 +/- 0.5 mm
Beltline (Gates)	45.5 +/- 0.5 mm	45.5 +/- 0.5 mm
Beltline (Continental)	46.2 +/- 0.5 mm	46.2 +/- 0.5 mm
Sprocket thickness (chain)	2.3 mm	2.3 mm
Sprocket thickness (belt)	4.3 mm	4.3 mm
Sprocket sizes (chain)	16 - 22 T	16 - 22 T
Sprocket sizes (belt)	20 - 28 T	20 - 28 T
Sprocket type	9-spline, one side flat	9-spline, one side flat
Chain type	3/32", 1/8" with 3 mm offset cog	3/32" , 1/8" with 3mm offset cog
Min. sprocket ratio (pedal bikes)	1.8	1.8
Min. sprocket ratio (front motor)	1.8	1.8
Min. sprocket ratio (mid motor)	2.1	2.0
Min. sprocket ratio (Bosch Gen2)	0.84	0.80
Min. sprocket ratio (MPF)	1.63	1.55
Recommended lacing patterns	2-cross for 26" or larger, 1-cross for 24" or smaller, radial spoking is not allowed	2-cross for 26" or larger, 1-cross for 24" or smaller, radial spoking is not allowed

* See separate table

enviolo

Internal gear hub

enviolo SP

enviolo CA

enviolo CO

	enviolo SP	enviolo CA	enviolo CO
Colors	Matt black / silver	Matt black / dark grey	Matt black / dark grey
Weight	2450 g	2450 g	2450 g
Max. speed RPM	800 RPM	800 RPM	800 RPM
Nominal ratio range	380% (0.5 - 1.90)	380% (0.5 - 1.90)	310% (0.55 - 1.7)
Max. continuous torque from the drive system	120 Nm*	120 Nm*	50 Nm*
Max. peak torque from the drive system	120 Nm*	100 Nm*	80 Nm*
Max. nominal power input from the drive system	500 W*	500 W*	250 W*
Max. gross vehicle weight (rider + cargo + bike)	280 kg*	280 kg*	160 kg*
Lifetime	20,000 km	20,000 km	20,000 km
IP classification	Hub = IP65, freewheel = IP54, rear shifter = IP54	Hub = IP65, freewheel = IP54, rear shifter = IP54	Hub = IP65, freewheel = IP54, rear shifter = IP54
Temperature range	-20°C to 48°C	-20°C to 48°C	-20°C to 48°C
Brake options	6-bolt disc/rim	6-bolt disc/rim	6-bolt disc/rim/roller
Max. brake disc rotor	203 mm	203 mm	180 mm
Disc brake screw length req.	10 - 17 mm	10 - 17 mm	10 - 17 mm
Max. disc brake screw torque	Use disc brake manufacturers recommendation, but don´t exceed 6.2 Nm	Use disc brake manufacturers recommendation, but don´t exceed 6.2 Nm	Use disc brake manufacturers recommendation, but don´t exceed 6.2 Nm
Spoke options	32/36	32/36	32/36
Spoke size	2 mm - 2.34 mm	2 mm - 2.34 mm	2 mm - 2.34 mm
Spoke flange diameter	125 mm	125 mm	125 mm
Spoke hole diameter	2.9 mm	2.9 mm	2.9 mm
Wheel size	Minimum 16"	Minimum 16"	Minimum 16"
Axle threads	M10*1 M12*1 tapered (Syntace) M12*1 flat (DT swiss) M12*1.5 (E-Thru) M12*1.75 (Maxle)	M10*1	M10*1
Dropout width	135 / 142 / 148 mm	135 mm	135 mm
Dropout thickness	6 - 10 mm	6 - 10 mm	6 - 10 mm
Dropout length for no-turn washer engagement (measured from axle center)	Recommended 14 mm, minimum 10 mm	Recommended 14 mm, minimum 10 mm	Recommended 14 mm, minimum 10 mm
Total axle width (w/o acorn nuts)	183 mm	183 mm	183 mm
Chainline	49.0 +/- 0.5 mm for 135 mm and 142 mm and 52+/- 0.5 mm for 148 mm dropouts	49.0 +/- 0.5 mm for 135 mm	49.0 +/- 0.5 mm
Beltline (Gates)	45.5 +/- 0.5 mm for 135 mm and 142 mm and 48.7 +/- 0.5 mm for 148 mm dropouts	45.5 +/- 0.5 mm for 135 mm	45.5 +/- 0.5 mm
Sprocket thickness (chain)**	2.3 mm	2.3 mm	2.3 mm
Sprocket thickness (belt)	4.3 mm	4.3 mm	4.3 mm

* See separate table

** 2 mm spacer part of assembly package

enviolo Internal gear hub	enviolo SP	enviolo CA	enviolo CO
Sprocket sizes (chain)	16 - 22 T	16 - 22 T	16 - 22 T
Sprocket sizes (belt)	20 - 28 T	20 - 28 T	20 - 28 T
Sprocket type	9-spline, one side flat	9-spline, one side flat	9-spline, one side flat
Chain type	3/32" , 1/8" with 3mm offset cog	3/32" , 1/8" with 3mm offset cog	3/32" , 1/8" with 3mm offset cog
Min. sprocket ratio (pedal bikes)	1.8	1.8	1.8
Min. sprocket ratio (front motor)	1.8	1.8	1.8
Min. sprocket ratio (mid motor)	2.0	2.0	2.0
Min. sprocket ratio (Bosch Gen2)	0.80	0.80	0.80
Min. sprocket ratio (MPF)	1.55	1.55	1.55
Recommended lacing patterns	2-cross for 26" or larger, 1-cross for 24" or smaller, radial spoking is not allowed	2-cross for 26" or larger, 1-cross for 24" or smaller, radial spoking is not allowed	2-cross for 26" or larger, 1-cross for 24" or smaller, radial spoking is not allowed

Groupset Power Limits

Nominal Power
250 W

	130 kg	160 kg	180 kg	200 kg	220 kg	240 kg	280 kg
45 Nm	CT TR	CT TR	TR	SP CA	SP CA	SP CA	SP CA
50 Nm	CT TR	CT TR	TR	SP CA	SP CA	SP CA	SP CA
55 Nm	TR	TR	TR	SP CA	SP CA	SP CA	SP CA
60 Nm	TR	TR	TR	SP CA	SP CA	SP CA	SP CA
65 Nm	TR	TR	TR	SP CA	SP CA	SP CA	SP CA
70 Nm	TR	TR	TR	SP CA	SP CA	SP CA	
75 Nm	TR	TR	TR	SP CA	SP CA	SP CA	
80 Nm	SP CA	SP CA	SP CA				
85 Nm	SP CA	SP CA	SP CA				
90 Nm	SP CA	SP CA	SP CA				
95 Nm	SP CA	SP CA	SP CA				
100 Nm	SP CA	SP CA	SP CA				
120 Nm	SP	SP	SP				

Nominal Power
350 W

	130 kg	160 kg	180 kg	200 kg
45 Nm	SP CA	SP CA	SP CA	SP CA
50 Nm	SP CA	SP CA	SP CA	SP CA
55 Nm	SP CA	SP CA	SP CA	SP CA
60 Nm	SP CA	SP CA	SP CA	SP CA
65 Nm	SP CA	SP CA	SP CA	SP CA
70 Nm	SP CA	SP CA	SP CA	SP CA
75 Nm	SP CA	SP CA	SP CA	SP CA
80 Nm	SP CA	SP CA	SP CA	
85 Nm				
90 Nm				
95 Nm				
100 Nm				
120 Nm				

Nominal Power
500 W

	130 kg	160 kg
45 Nm	SP CA	SP CA
50 Nm	SP CA	SP CA
55 Nm		
60 Nm		
65 Nm		
70 Nm		
75 Nm		
80 Nm		
85 Nm		
90 Nm		
95 Nm		
100 Nm		
120 Nm		

CT TR SP CA CO

Minimum sprocket ratios based on drive system torque

250 W

enviolo Sportive Groupset SP

Motor Torque at BB	Weight 160 kg	180 kg	200 kg	240 kg	280 kg
50 Nm	2.00	2.00	2.00	2.00	2.00
55 Nm	2.00	2.00	2.00	2.00	2.00
60 Nm	2.00	2.00	2.00	2.00	2.00
65 Nm	2.00	2.00	2.00	2.00	2.00
70 Nm	2.00	2.00	2.00	2.00	2.15
75 Nm	2.00	2.00	2.00	2.00	2.31
80 Nm	2.00	2.00	2.13	2.13	2.46
85 Nm	2.00	2.13	2.27	2.27	
90 Nm	2.00	2.25	2.40	2.40	
95 Nm	2.00	2.38			
100 Nm	2.00	2.50			
105 Nm	2.10				
110 Nm	2.20				
115 Nm	2.30				
120 Nm	2.40				

enviolo Cargo Groupset CA

Motor Torque at BB	Weight 160 kg	180 kg	200 kg	240 kg	280 kg
50 Nm	2.00	2.00	2.00	2.00	2.00
55 Nm	2.00	2.00	2.00	2.00	2.00
60 Nm	2.00	2.00	2.00	2.00	2.00
65 Nm	2.00	2.00	2.00	2.00	2.00
70 Nm	2.00	2.00	2.00	2.00	2.15
75 Nm	2.00	2.00	2.00	2.00	2.31
80 Nm	2.00	2.00	2.13	2.13	2.46
85 Nm	2.13	2.13	2.27	2.27	
90 Nm	2.25	2.25	2.40	2.40	
95 Nm	2.38	2.38			
100 Nm	2.50	2.50			

enviolo Trekking Groupset TR

Motor Torque at BB	Weight 160 kg	180 kg
50 Nm	2.00	2.00
55 Nm	2.00	2.00
60 Nm	2.00	2.00
65 Nm	2.00	2.00
70 Nm	2.00	2.00
75 Nm	2.00	2.00
80 Nm	2.13	2.13
85 Nm	2.27	2.27
90 Nm	2.40	2.40

enviolo City / Commercial Groupset CT CO

Motor Torque at BB	Weight 160 kg
50 Nm	2.10
55 Nm	2.31

Minimum sprocket ratios based on drive system torque

350 W

enviolo Sportive Groupset SP

Motor Torque at BB	Weight 160 kg	180 kg	200 kg
50 Nm	2.00	2.00	2.00
55 Nm	2.00	2.00	2.00
60 Nm	2.00	2.00	2.00
65 Nm	2.00	2.00	2.00
70 Nm	2.00	2.00	2.00
75 Nm	2.00	2.00	2.00
80 Nm	2.00	2.00	2.13
85 Nm	2.13	2.13	2.27
90 Nm	2.25	2.25	2.40
95 Nm	2.38	2.38	
100 Nm	2.50	2.50	

enviolo Cargo Groupset CA

Motor Torque at BB	Weight 160 kg	180 kg	200 kg
50 Nm	2.00	2.00	2.00
55 Nm	2.00	2.00	2.00
60 Nm	2.00	2.00	2.00
65 Nm	2.00	2.00	2.00
70 Nm	2.00	2.00	2.00
75 Nm	2.00	2.00	2.00
80 Nm	2.00	2.00	2.13
85 Nm	2.13	2.13	2.27
90 Nm	2.25	2.25	2.40
95 Nm	2.38	2.38	
100 Nm	2.50	2.50	

500 W

enviolo Sportive Groupset SP

Motor Torque at BB	Weight 160 kg
50 Nm	2.00
55 Nm	2.20
60 Nm	2.40

enviolo Cargo Groupset CA

Motor Torque at BB	Weight 160 kg
50 Nm	2.00
55 Nm	2.20
60 Nm	2.40

enviolo

Manual Controller

enviolo CT

enviolo CA

enviolo CO

Shift cable length	2200 or 3300mm	2200 or 3300mm	2200mm
Grip rotation options*	Multi-turn or One-turn	Multi-turn or One-turn	Multi-turn or One-turn
Handlebar diameter	22.2 mm	22.2 mm	22.2 mm
Cable housing	Full cable housing recommended, dual cable route	Full cable housing recommended, dual cable route	Full cable housing recommended, dual cable route
Shift cable diameter	1.1 - 1.2 mm (original 1.2 mm)	1.1 - 1.2 mm (original 1.1 mm)	1.1 - 1.2 mm (original 1.1 mm)
Compatible with all CVPs	Yes	Yes	Yes
IP classification	IP54	IP54	IP54
Grip Material	Standard	Extended Durability	Extended Durability

enviolo

Manual Controller

enviolo TR

enviolo SP

Shift cable length	2200 or 3300mm	2200 or 3300mm
Grip rotation options*	Multi-turn or One-turn	Multi-turn or One-turn
Handlebar diameter	22.2 mm	22.2 mm
Cable housing	Full cable housing recommended, dual cable route	Full cable housing recommended, dual cable route
Shift cable diameter	1.1 - 1.2 mm (original 1.1 mm)	1.1 - 1.2 mm (original 1.1 mm)
Compatible with all CVPs	Yes	Yes
IP classification	IP54	IP54
Grip Material	Standard	Standard

enviolo

Automatic Controller

3-Button**

Grip Shifter

Cable	Wireless	Wireless
Control input	3-button	3-button
Handlebar diameter	22.2mm and 31.8mm	22.2 mm
Compatible with all IGH	Yes	Yes
IP classification	IP54	IP54

* Grip rotation options and controllers are interchangeable with all CVPs

** The 3-button controller is currently under evaluation.

enviolo

Automatic
Hub Interfaces

CT

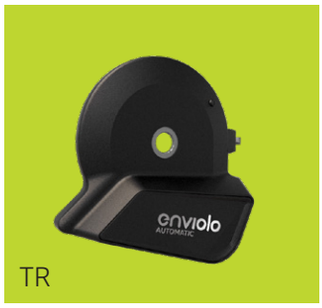

TR

CO

IP classification	IP54	IP54	IP54
Electrical specifications*:			
Nominal voltage range	18 V - 55 V	18 V - 55 V	18 V - 55 V
Max. voltage	55 V	55 V	55 V
Min. voltage	18 V	18 V	18 V
Built-in fuse protection	TBD	TBD	TBD
In-rush current at startup	TBD	TBD	TBD
Average power consumption	TBD	TBD	TBD
Peak power consumption	TBD	TBD	TBD
Shut-down protection	Data is saved at shutdown	Data is saved at shutdown	Data is saved at shutdown
Sleep mode	Time can be pre-set using app	Time can be pre-set using app	Time can be pre-set using app
Power consumption Sleep mode	TBD	TBD	TBD
Power consumption Non-shifting	TBD	TBD	TBD
Wiring:			
Wire diameter	I-Harness = 6.6mm	I-Harness = 6.6mm	I-Harness = 6.6mm
Connector Ø on AHI	4-pin = 9mm	4-pin = 9mm	4-pin = 9mm
Connector Ø to power source	10.2 X 14.2 mm	10.2 X 14.2 mm	10.2 X 14.2 mm

enviolo

Automatic
Hub Interfaces

SP

CA

IP classification	IP54	IP54
Electrical specifications:		
Nominal voltage range	18 V - 55 V	18 V - 55 V
Max. voltage	55 V	55 V
Min. voltage	18 V	18 V
Built-in fuse protection	TBD	TBD
In-rush current at startup	TBD	TBD
Average power consumption	TBD	TBD
Peak power consumption	TBD	TBD
Shut-down protection	Data is saved at shutdown	Data is saved at shutdown
Sleep mode	Time can be pre-set using app	Time can be pre-set using app
Power consumption Sleep mode	TBD	TBD
Power consumption Non-shifting	TBD	TBD
Wiring:		
Wire diameter	I-Harness = 6.6mm	I-Harness = 6.6 mm
Connector Ø on AHI	4-pin = 9mm	4-pin = 9mm
Connector Ø to power source	10.2 X 14.2 mm	10.2 X 14.2 mm

*Final specification under evaluation.

Compatibility Matrix

enviolo

MANUAL		✓	○	○	✓	○	✕	○	✕	○	○
		○	✓	✓	○	○	✕	○	✕	○	○
		○	✕	○	✕	✓	○	○	○	○	✕
	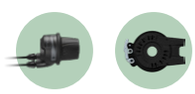	○	✕	○	✕	○	✓	✓	✓	○	✕
		○	○	○	○	○	✕	○	✕	✓	✓
AUTOMATIC		✓	✓	○	○	○	✕	○	✕	○	○
		○	○	✓	✓	○	✕	○	✕	○	○
		○	✕	○	✕	✓	✓	○	○	○	✕
		○	✕	○	✕	○	○	✓	✓	○	✕
		○	○	○	○	○	✕	○	✕	✓	✓

* The 3-button controller is currently under evaluation.

○ *Compatible* ✓ *Recommended* ✕ *Not Compatible*

NuVinci OPTIMIZED

Frame Requirements

To assist you in designing your frames to be compatible with our products (e.g. sufficient clearance to chainstay/ chain case) we have compiled an overview of our components with system measurements.

For 3D data please visit our website enviolo.com.

Mechanical Frame Requirements

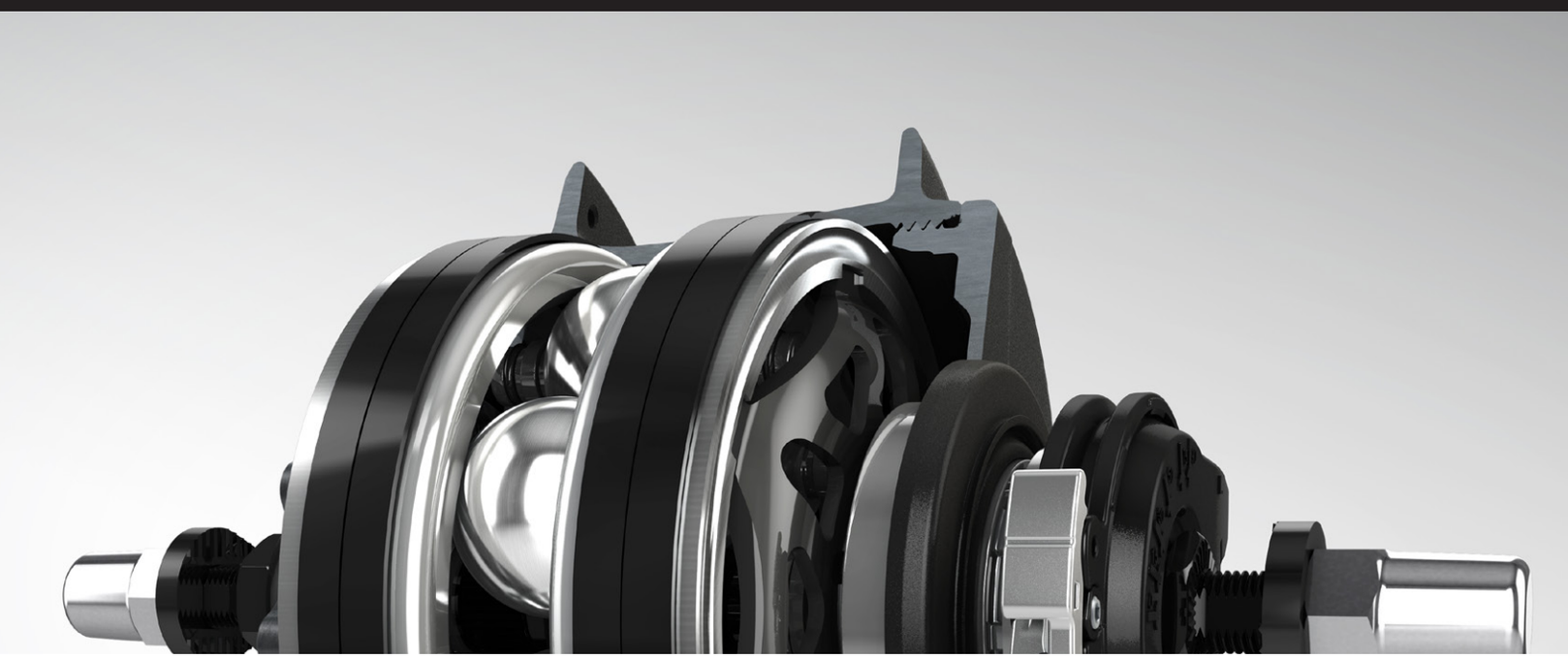

Vertical dropout

Using a vertical dropout requires a secondary chain tension adjustment option (e.g. eccentric bottom bracket or chain tensioner). The advantage of vertical dropouts is that once the tension is set, the rear wheel can be reinstalled without readjusting the tension.

Horizontal dropout

Horizontal dropouts are preferable for *NuVinci Optimized* hubs, because they allow easy chain tension adjustment.

Mechanical cable routing

As in any other cable system, the number and sharpness of bends influences the ease of shifting. We recommend that you consider this in your cable routing to limit required shift effort.

142/148 mm dropout configurations

On 142/148 mm dropouts, where you plan to use the Automatic system, you require a sliding dropout, since the AHI is likely to interfere with derailleur hangers.

enviolo CT, enviolo TR, enviolo CO
Required Package Space

enviolo MANUAL

Components of Assembly

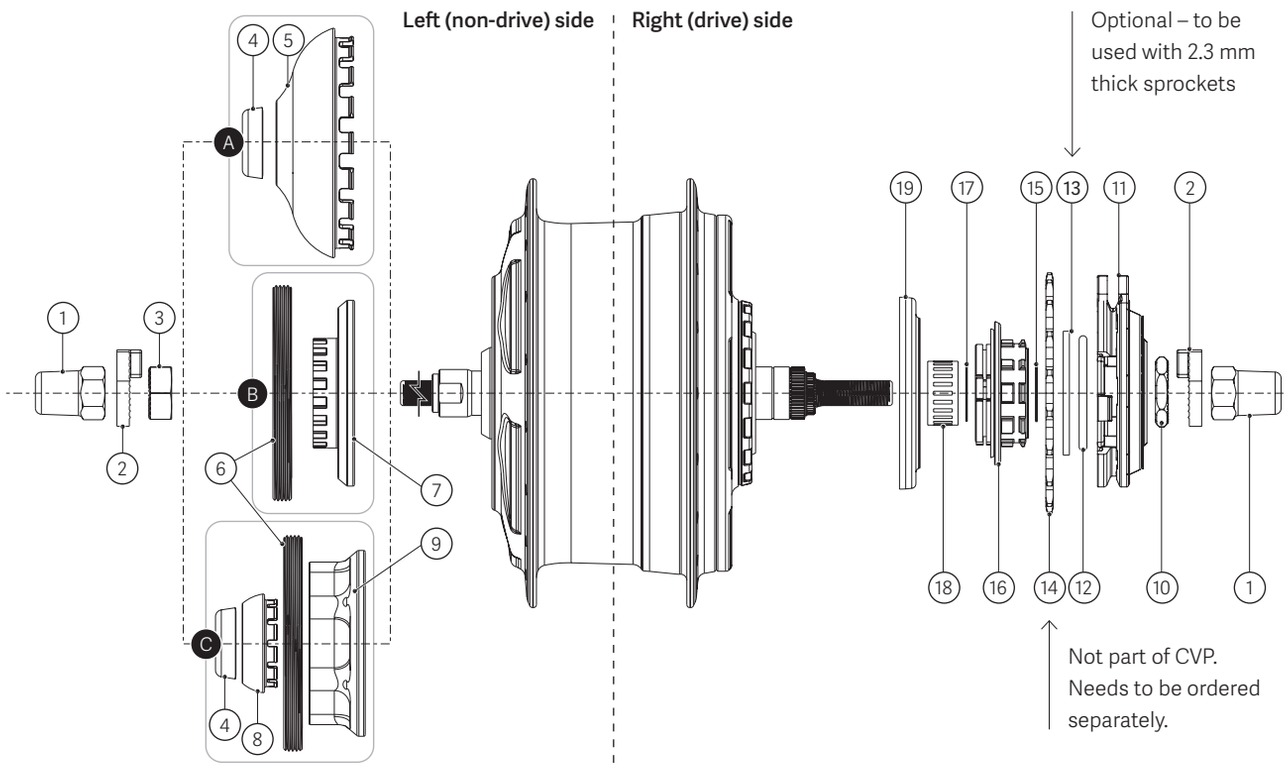

A Rim brake configuration
B Roller brake configuration
C Disc brake configuration

1 Axle nut
2 No-turn washer
3 Left-hand nut
4 Cupped washer
5 Rim brake cover
6 Brake lock ring
7 Roller brake adapter

8 Brake shield
9 Disc brake adapter
10 R.h. nut
11 Manual Hub interface
12 Sprocket snap ring
13 Sprocket spacer
14 Sprocket

15 Snap ring (freewheel)
16 Freewheel assy
17 Snap ring (interior)
18 Needle bearing
19 R.h. shield

CVP with Manual Hub Interface

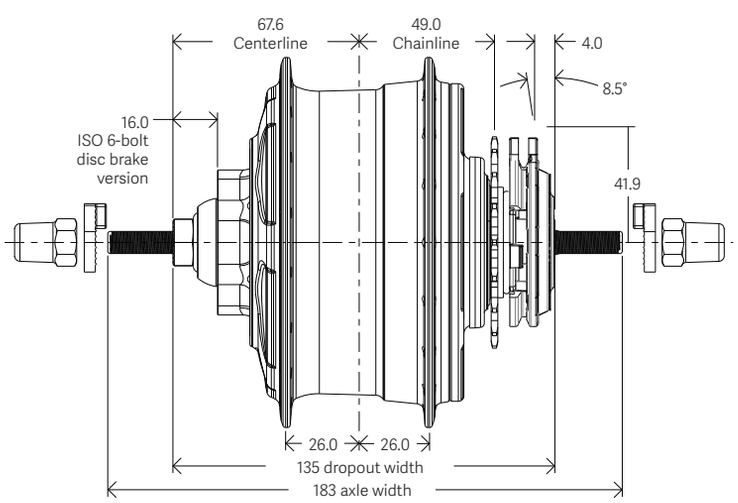

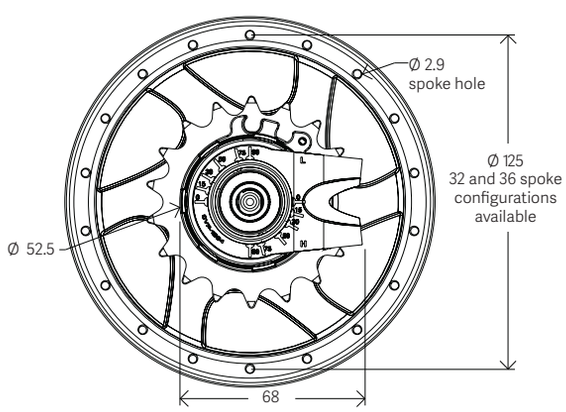

Components of Assembly

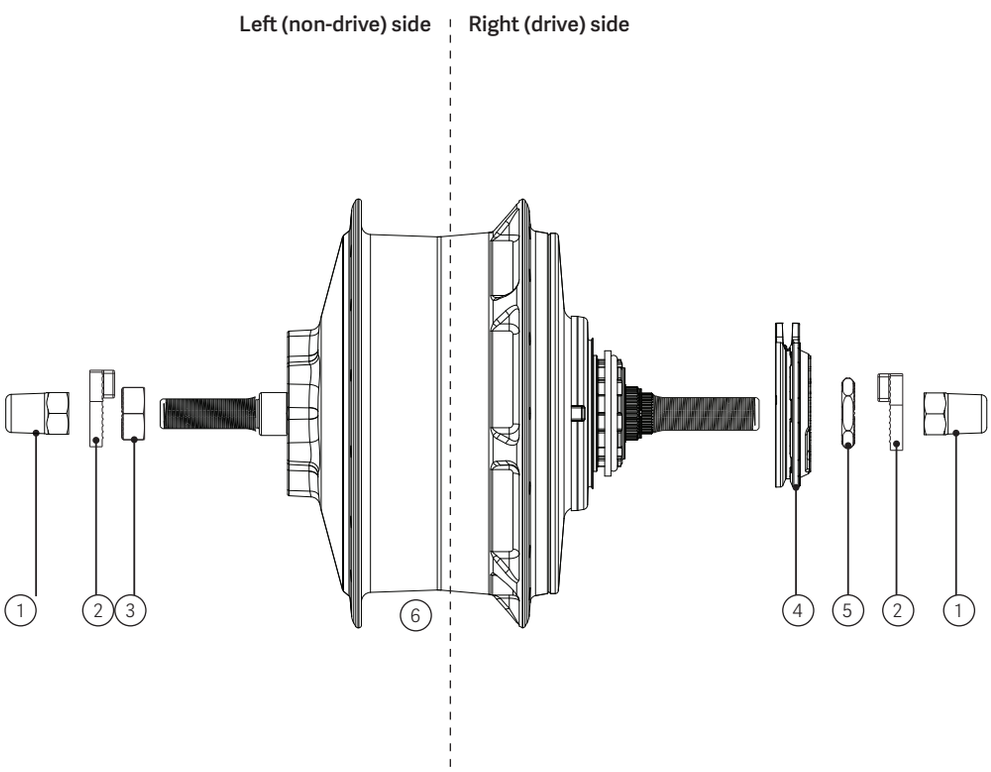

1 Nut, Acorn
2 No-turn washer
3 Left-hand nut
4 enviolo CA manual hub interface
5 RH Nut
6 Assembly enviolo CA IGH top level

CVP with Manual Hub Interface

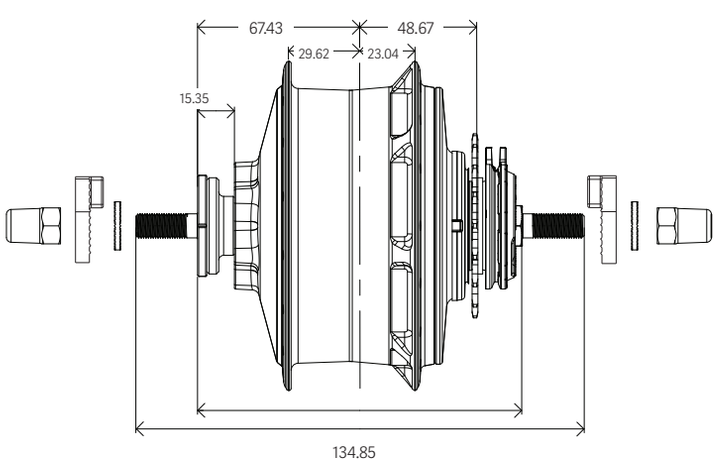

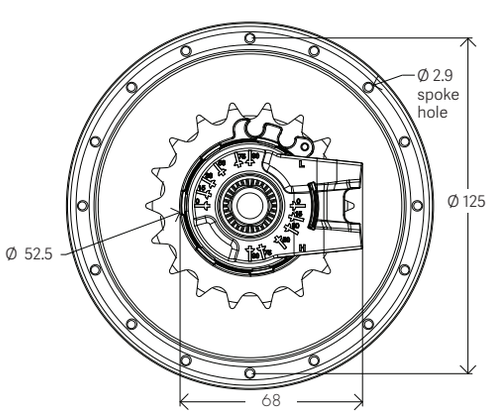

enviolo SP
Dropout Options

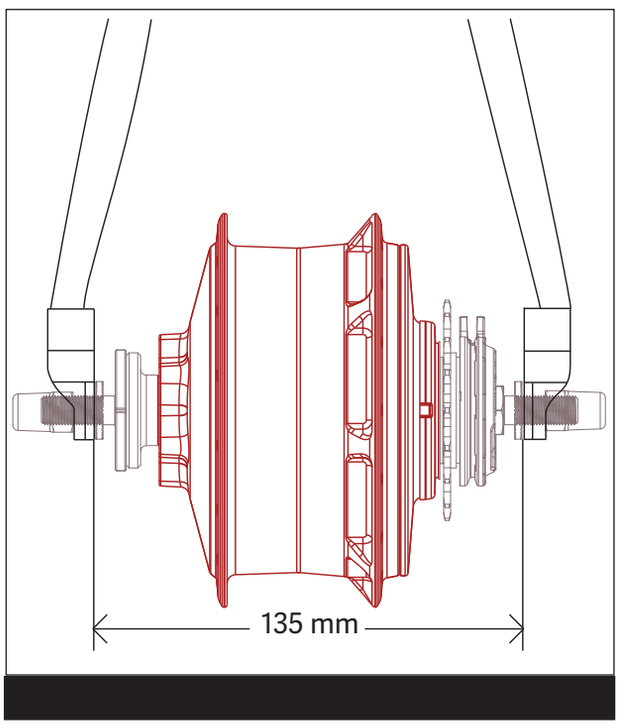

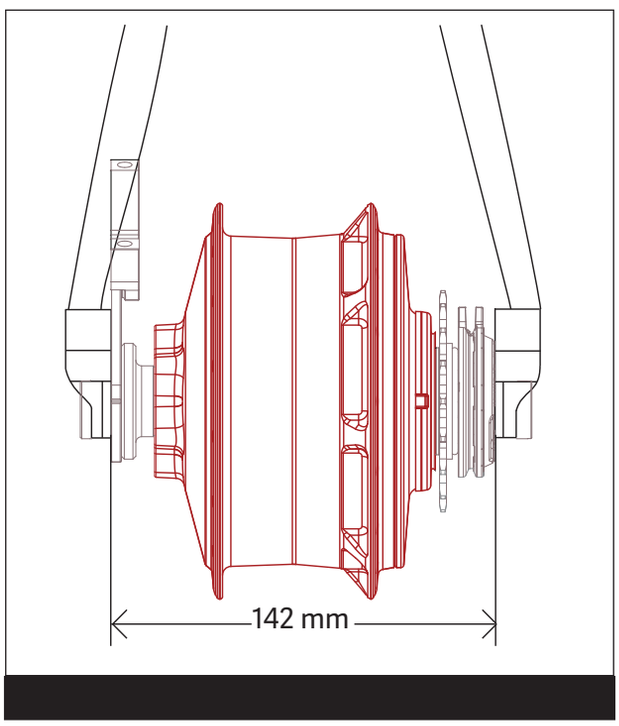

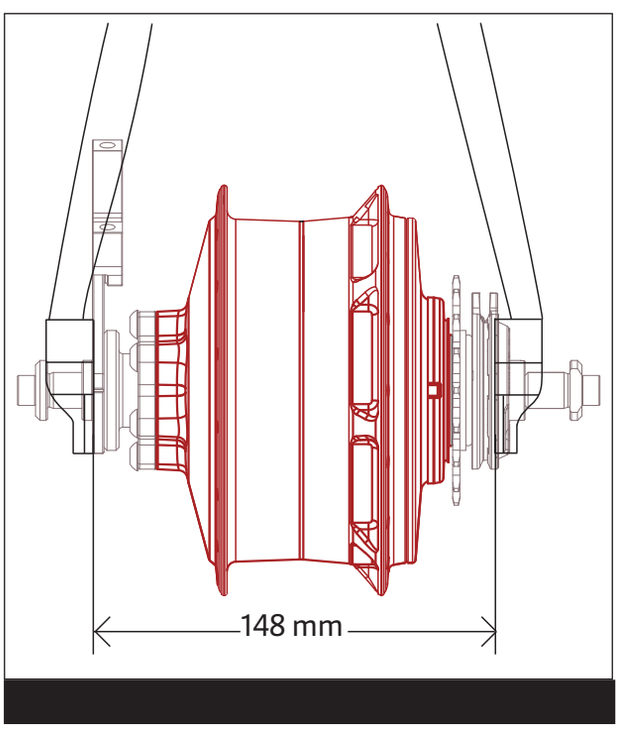

enviolo SP
Required Package Space
135 mm

Components of Assembly

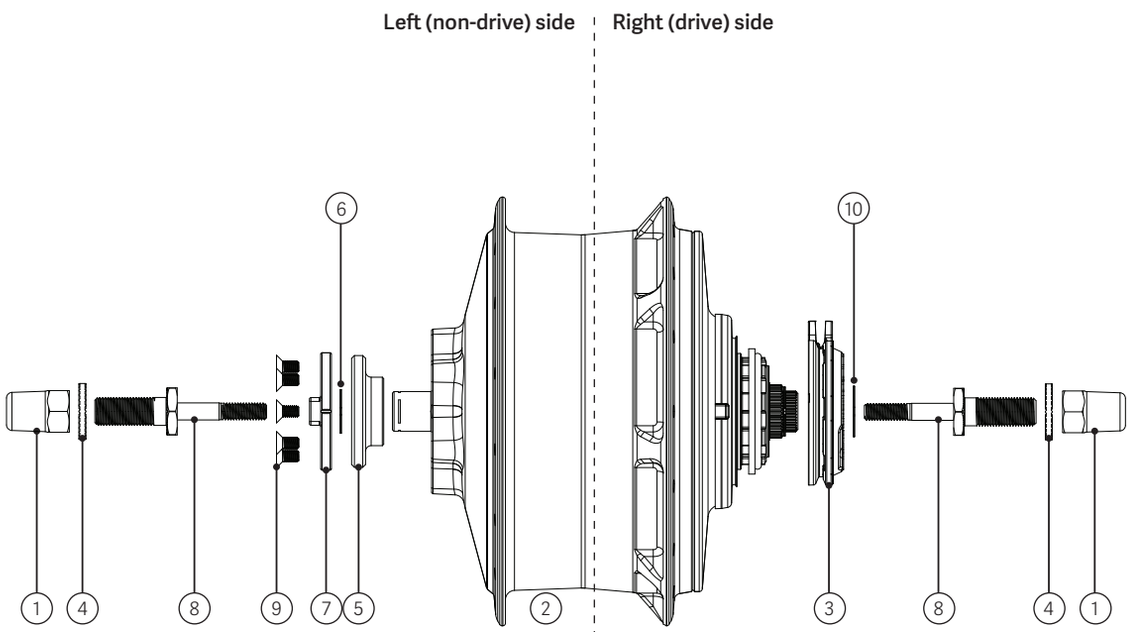

1 Nut, Acorn
2 Assembly enviolo SP CVP top level
3 enviolo SP manual hub interface
4 Lock washer, M10
5 Adapter, Torque Reaction
6 Retaining ring
7 Axle plate, 135 mm compatible
8 Shaft, threaded adapter
9 Bolt, countersunk, Torx, M4 x 0.7 x 8
10 Washer, spacer, 13 x 19 x 0.5

CVP with Manual Hub Interface

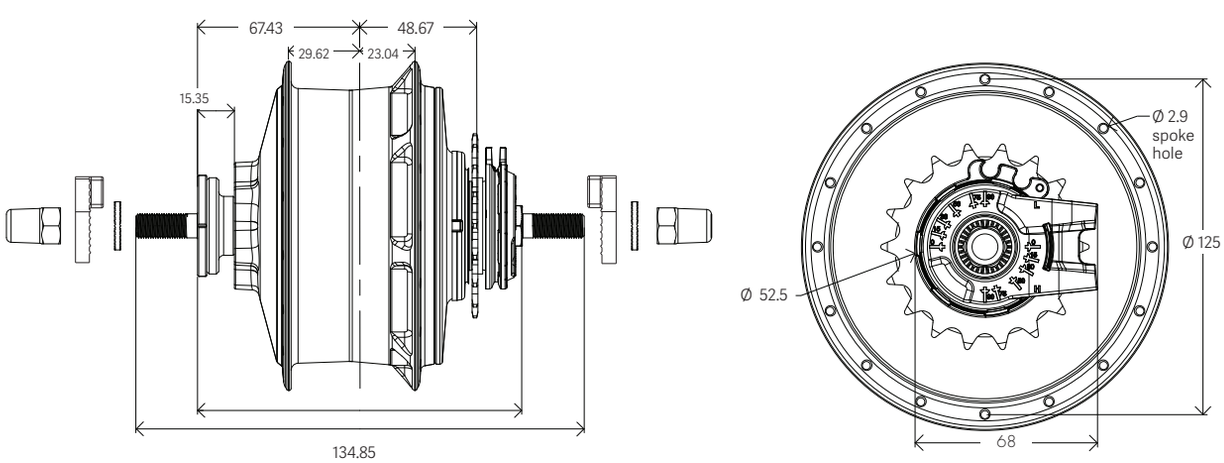

enviolo SP
Required Package Space
142 mm

Components of Assembly

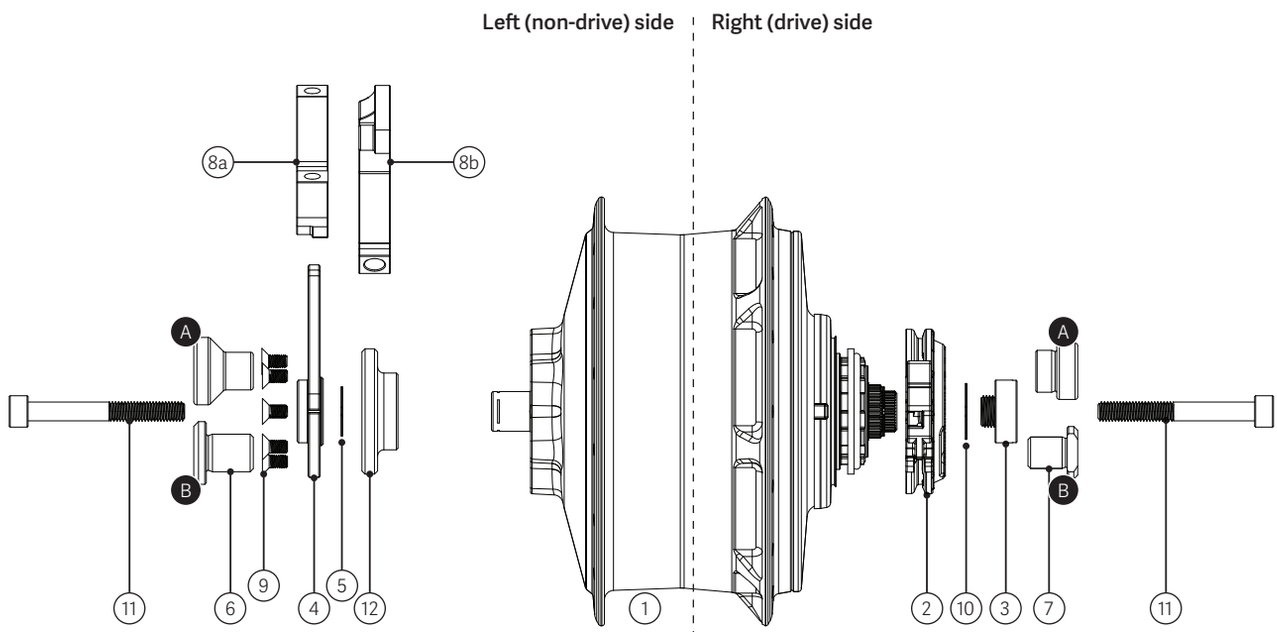

A Syntace
B DT Swiss, Maxle, E-Thru

1 Assembly Enviolo SP CVP top level
2 enviolo SP manual hub interface
3 Adapter, lock nut, OD20 or OD22, 12 x 142 / 12 x 148 compatible
4 Axle plate, 142/148 mm compatible
5 Retaining ring

6 Spacer, LH
7 Spacer RH
8a Brake caliper mount IS to PM
or
8b Brake caliper mount PM to PM

9 Bolt, countersunk, Torx, M4 x 0.7 x 8
10 Washer, spacer, 13 x 19 x 0.5
11 Socket head cap screw, M6
12 Adapter, Torque Reaction

CVP with Manual Hub Interface

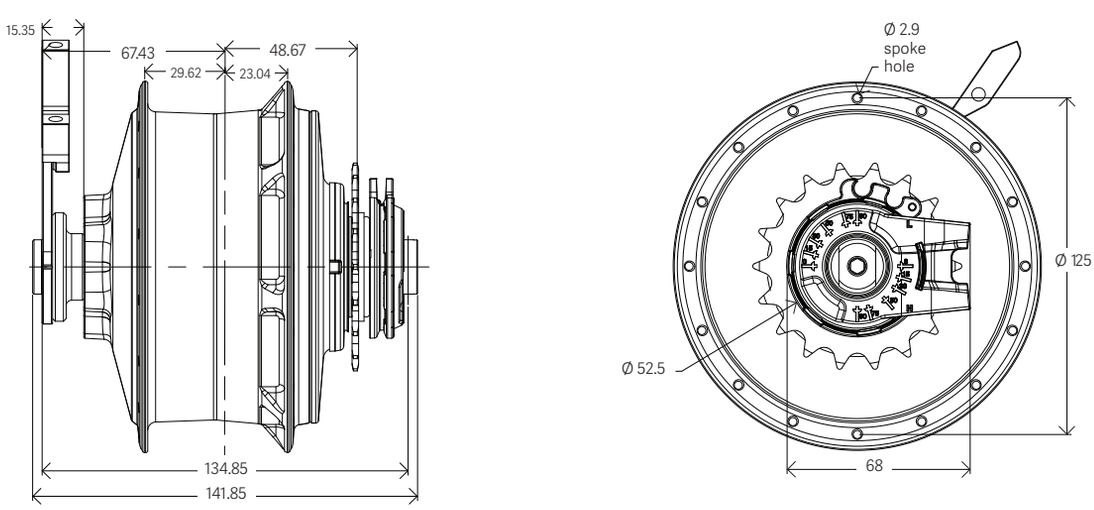

enviolo SP
Required Package Space
148 mm

Components of Assembly

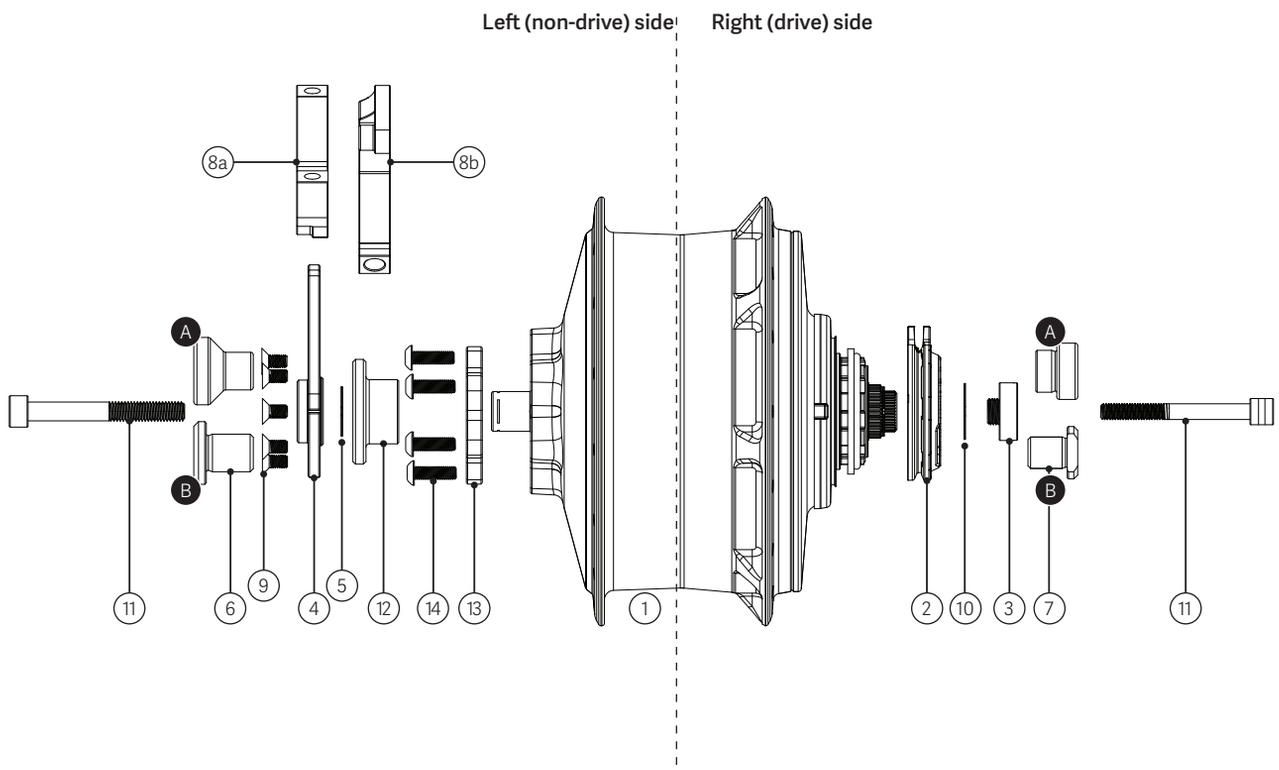

A Syntace
B DT Swiss, Maxle, E-Thru

1 Assembly enviolo SP CVP top level
2 enviolo SP manual hub interface
3 Adapter, lock nut, OD20 or OD22, 12 x 142 / 12 x 148 compatible
4 Axle plate, 142/148 mm compatible
5 Retaining ring

6 Spacer, LH
7 Spacer RH
8a Brake caliper mount IS to PM
or
8b Brake caliper mount PM to PM
9 Bolt, countersunk, Torx, M4 x 0.7 x 8

10 Washer, spacer, 13 x 19 x 0.5
11 Socket head cap screw, M6
12 Adapter, Torque Reaction
13 Spacer, disc brake, 12 x 148
14 Screw, button head, M5 x 0.8 x 16L, alloy

CVP with Manual Hub Interface

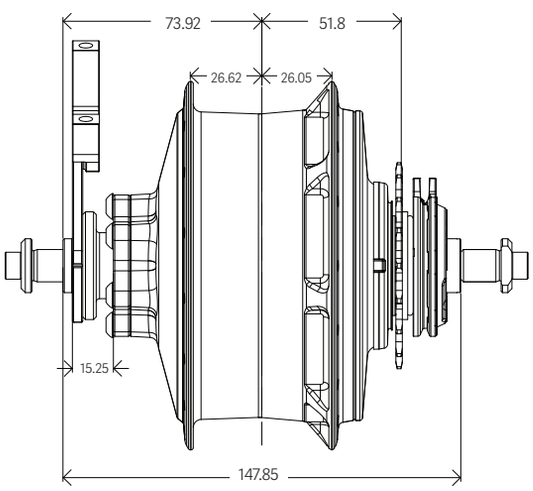

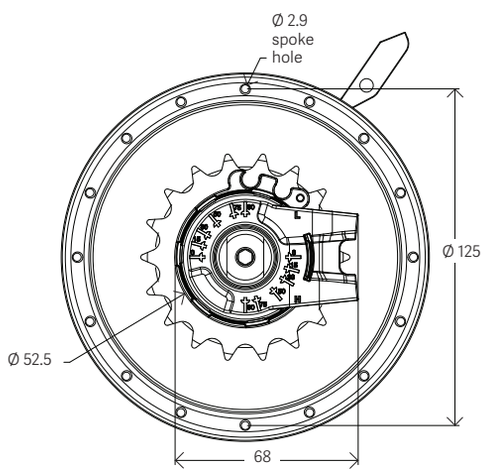

Individual Components

enviolo MANUAL

Multi-turn: Manual Hub Interface

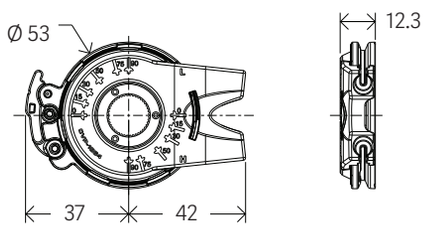

One-turn: Manual Hub Interface

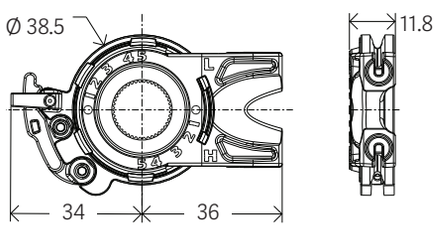

Multi-turn: Controller

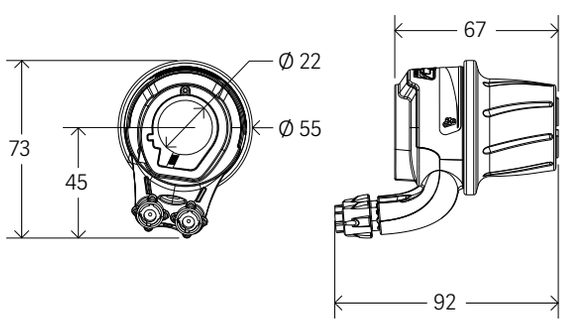

One-turn: Controller

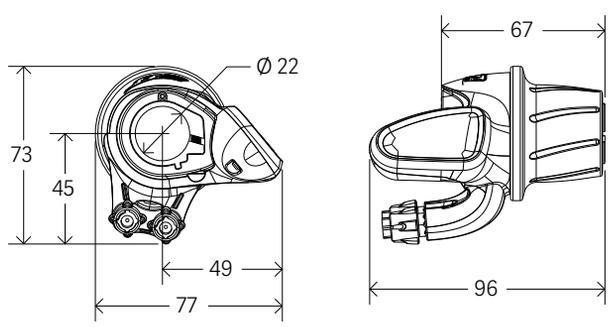

One-turn: Controller

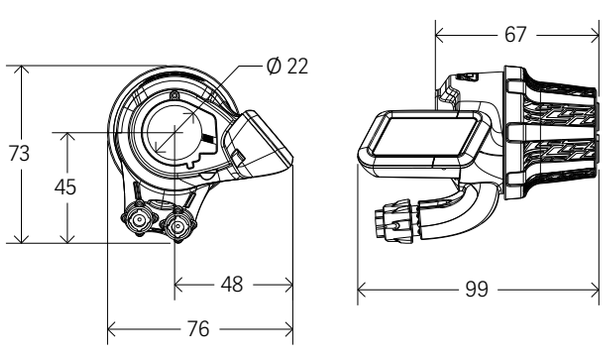

enviolo CT, enviolo TR, enviolo CO
Required Package Space

Components of Assembly

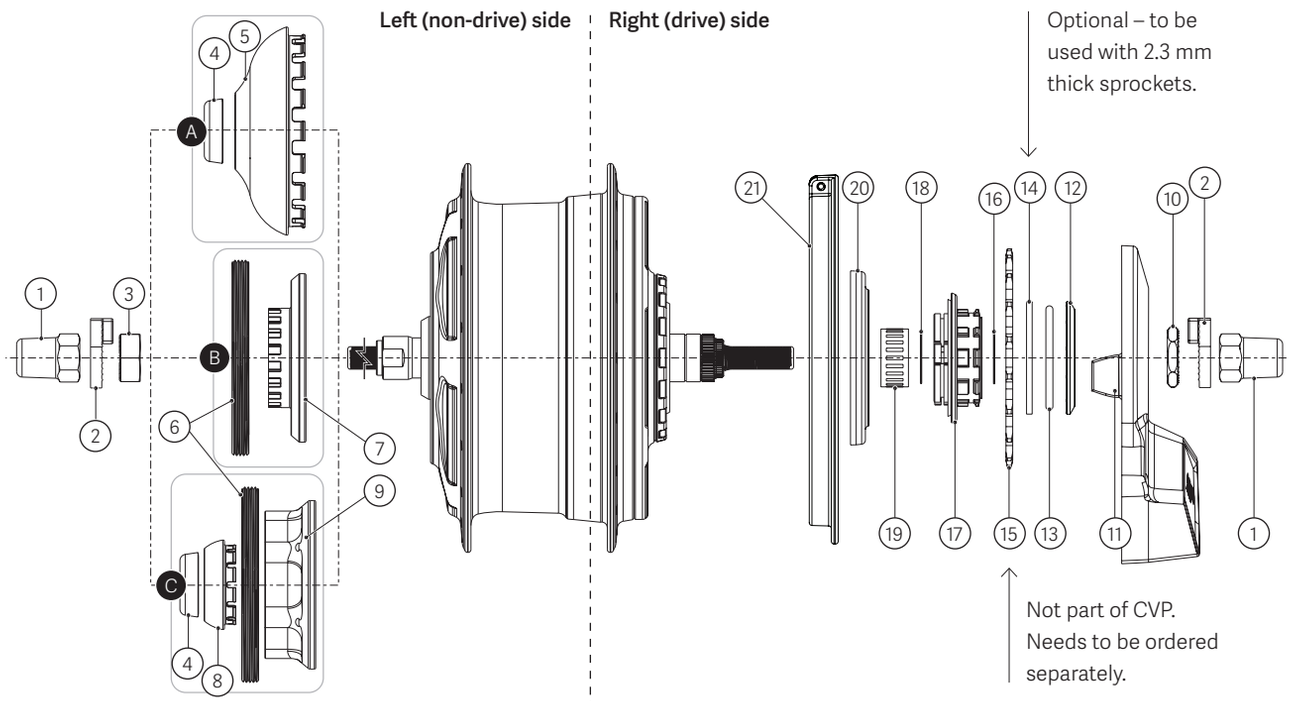

A Rim brake configuration
B Roller brake configuration
C Disc brake configuration

1 Axle nut
2 No-turn washer
3 Left-hand nut
4 Cupped washer
5 Rim brake cover
6 Brake lock ring
7 Roller brake adapter

8 Brake shield
9 Disc brake adapter
10 R.h. nut
11 Automatic hub interface
12 Sprocket encoder
13 Sprocket snap ring
14 Sprocket spacer

15 Sprocket
16 Snap ring (freewheel)
17 Freewheel assy
18 Snap ring (interior)
19 Needle bearing
20 R.h. shield
21 Hub encoder

CVP with Automatic Hub Interface

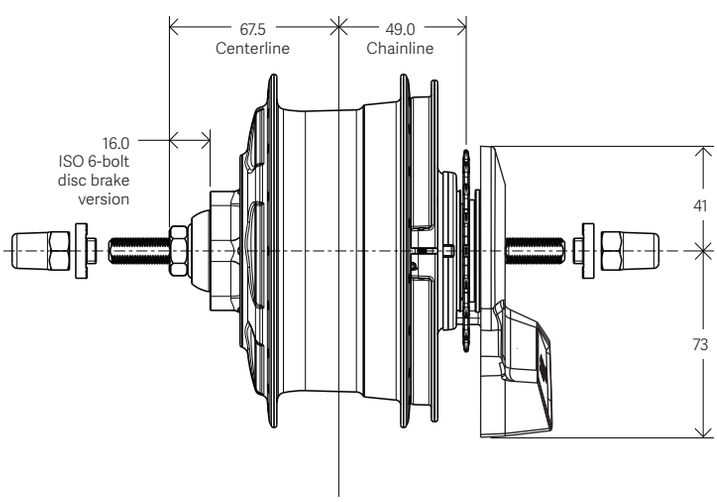

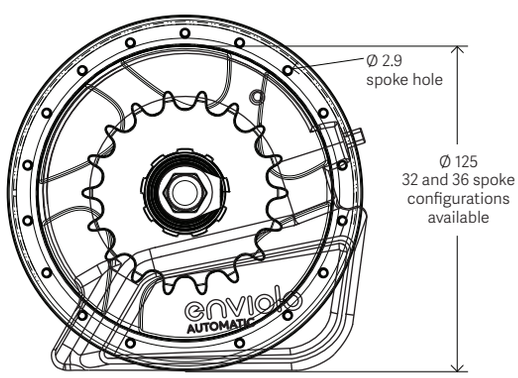

enviolo CA
Required Package Space
135 mm

Components of Assembly

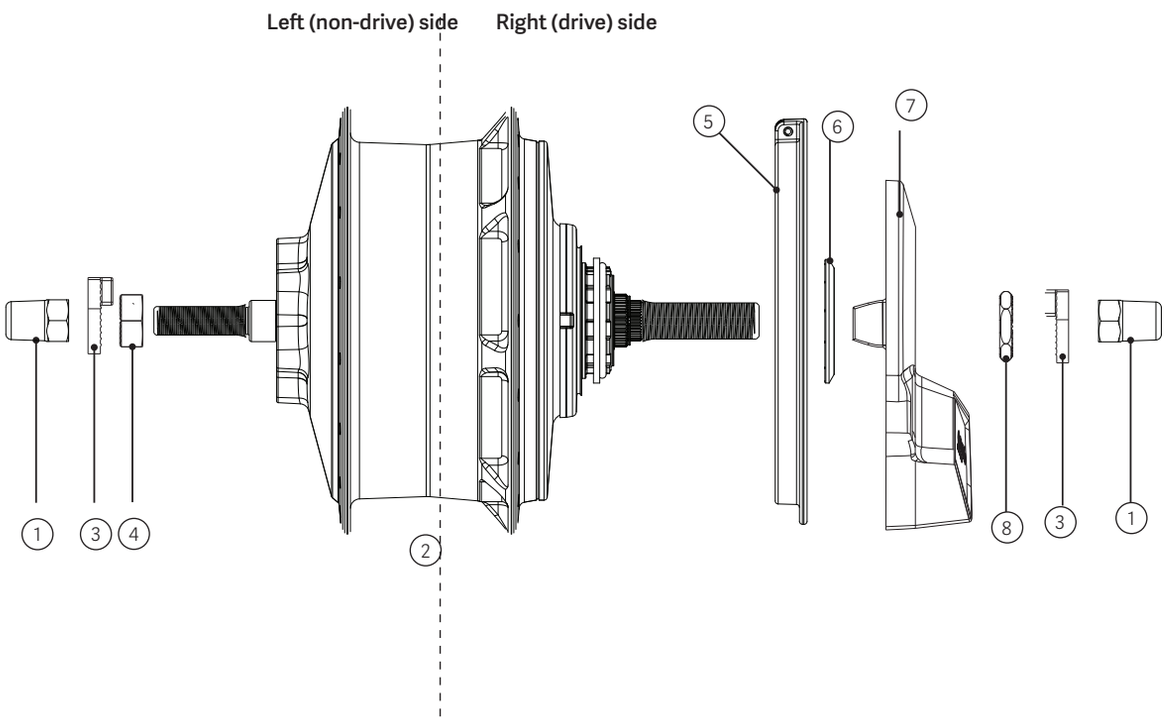

1 Nut, Acorn
2 Assembly enviolo CA CVP top level
3 No turn washer
4 Retaining ring
5 Hub encoder
6 Sprocket encoder
7 enviolo Automatic hub interface
8 RH Nut

CVP with Automatic Hub Interface

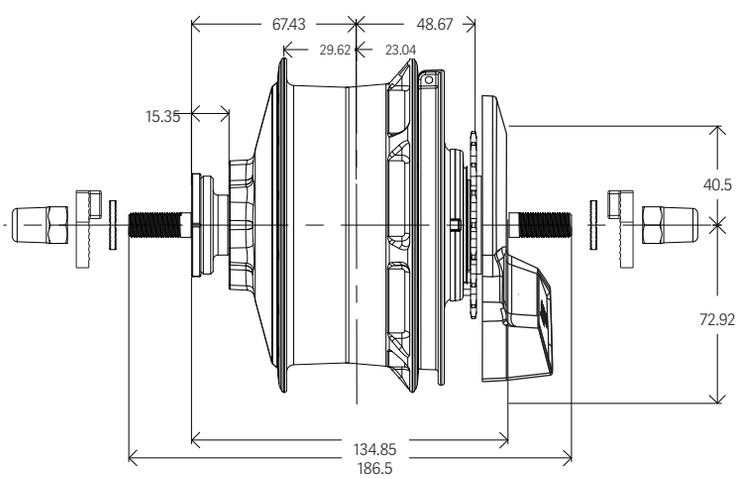

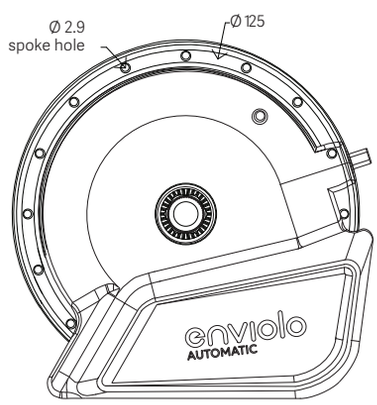

enviolo SP
Required Package Space
135 mm

Components of Assembly

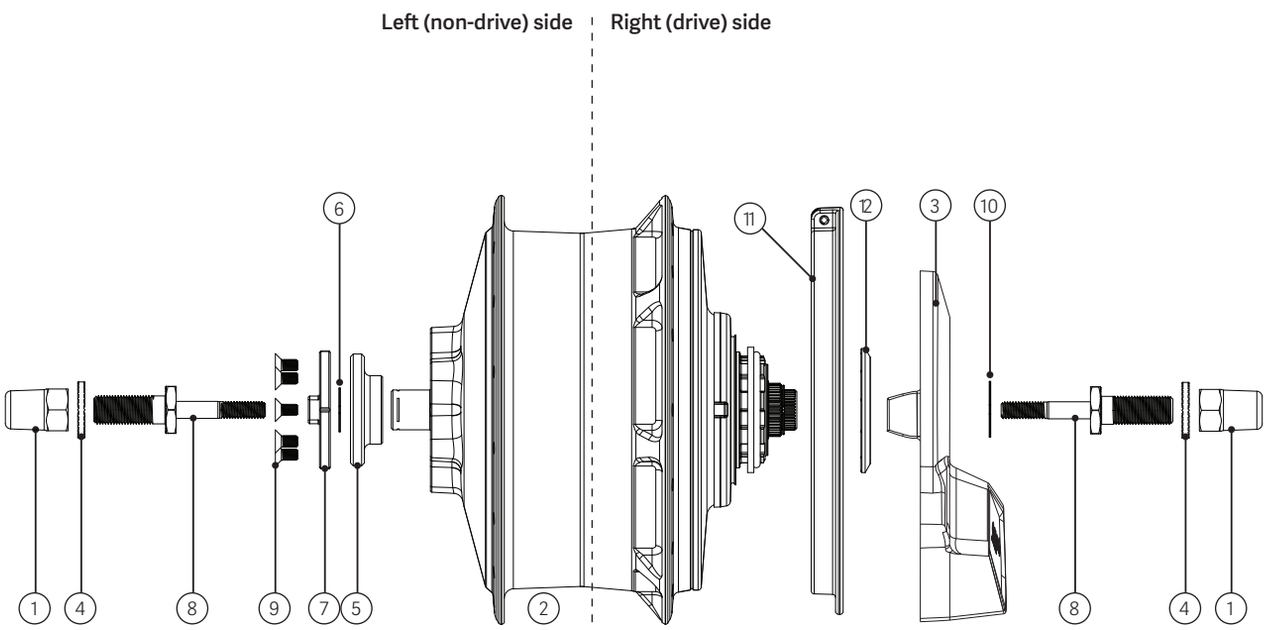

1 Nut, Acorn
2 Assembly enviolo SP CVP top level
3 Automatic hub interface
4 Lock washer, M10
5 Adapter, Torque Reaction
6 Retaining ring
7 Axle plate, 135 mm compatible
8 Shaft, threaded adapter
9 Bolt, countersunk, Torx, M4 x 0.7 x 8
10 Washer, spacer, 13 x 19 x 0.5
11 Hub encoder
12 Sprocket encoder

CVP with Automatic Hub Interface

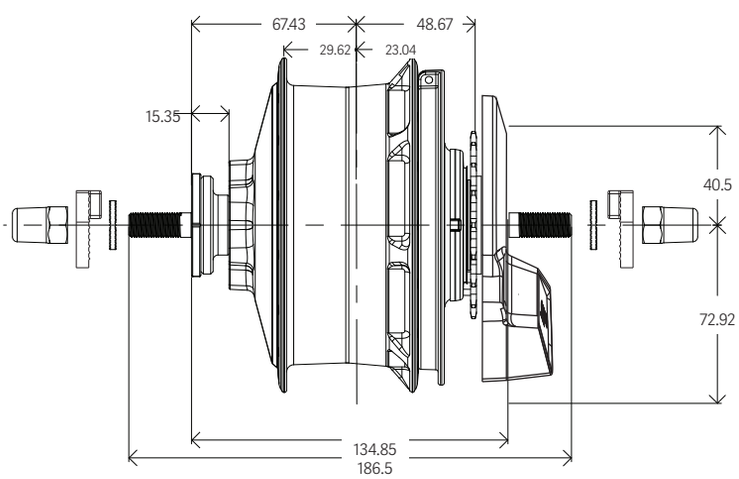

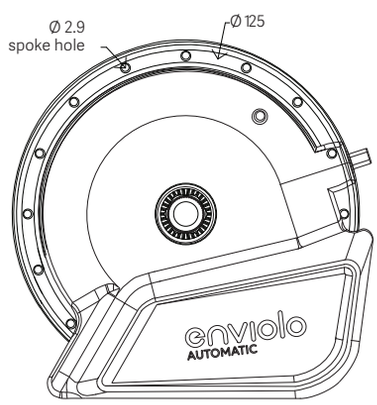

enviolo SP
Required Package Space
142 mm

Components of Assembly

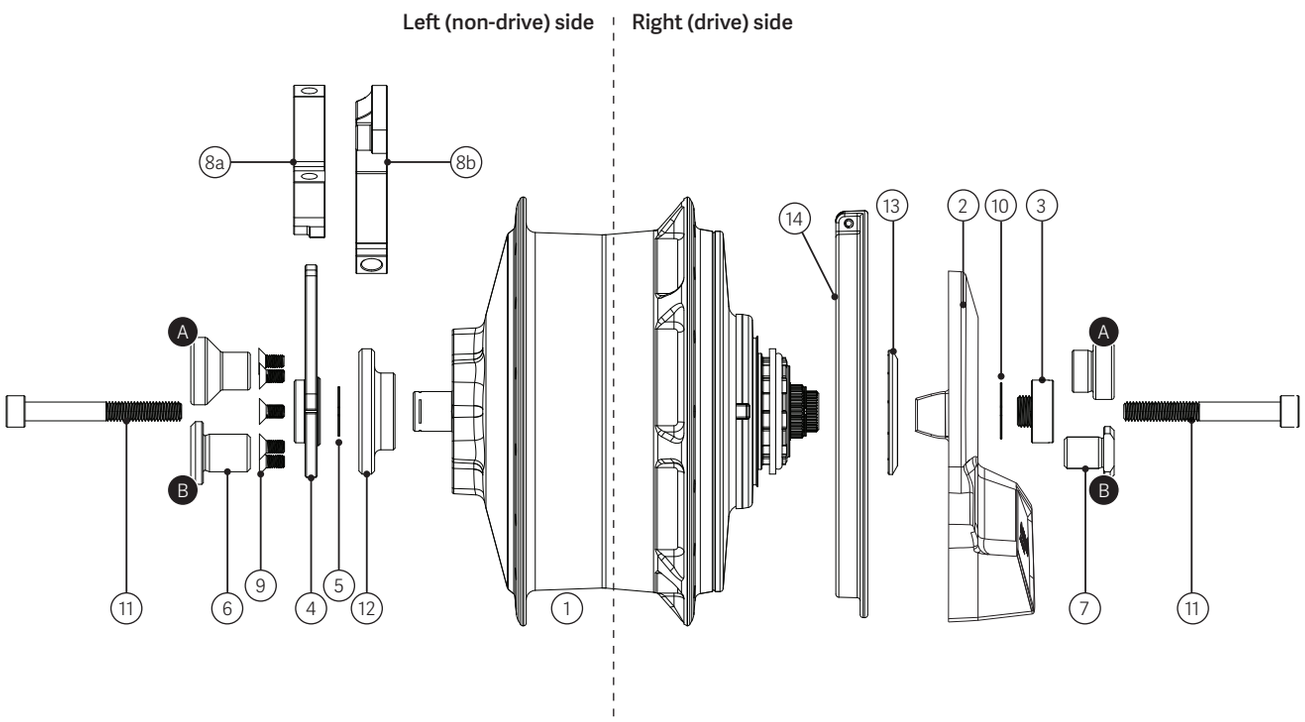

A Syntace
B DT Swiss, Maxle, E-Thru

1 Assembly enviolo SP CVP top level
2 Automatic hub interface
3 Adapter, lock nut, OD20 or OD22, 12 x 142 / 12 x 148 compatible
4 Axle plate, 142/148 mm compatible
5 Retaining ring

6 Spacer, LH
7 Spacer RH
8a Brake caliper mount IS to PM or
8b Brake caliper mount PM to PM
9 Bolt, countersunk, Torx, M4 x 0.7 x 8

10 Washer, spacer, 13 x 19 x 0.5
11 Socket head cap screw, M6
12 Adapter, Torque Reaction
13 Hub encoder
14 Sprocket encoder

CVP with Automatic Hub Interface

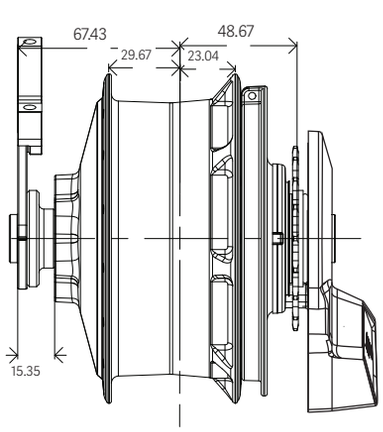

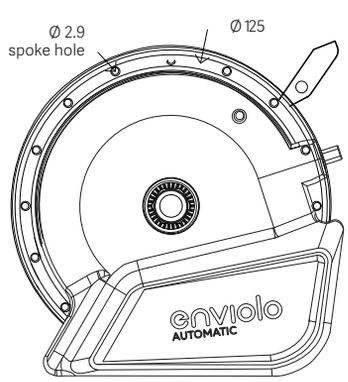

enviolo SP
Required Package Space
148 mm

Components of Assembly

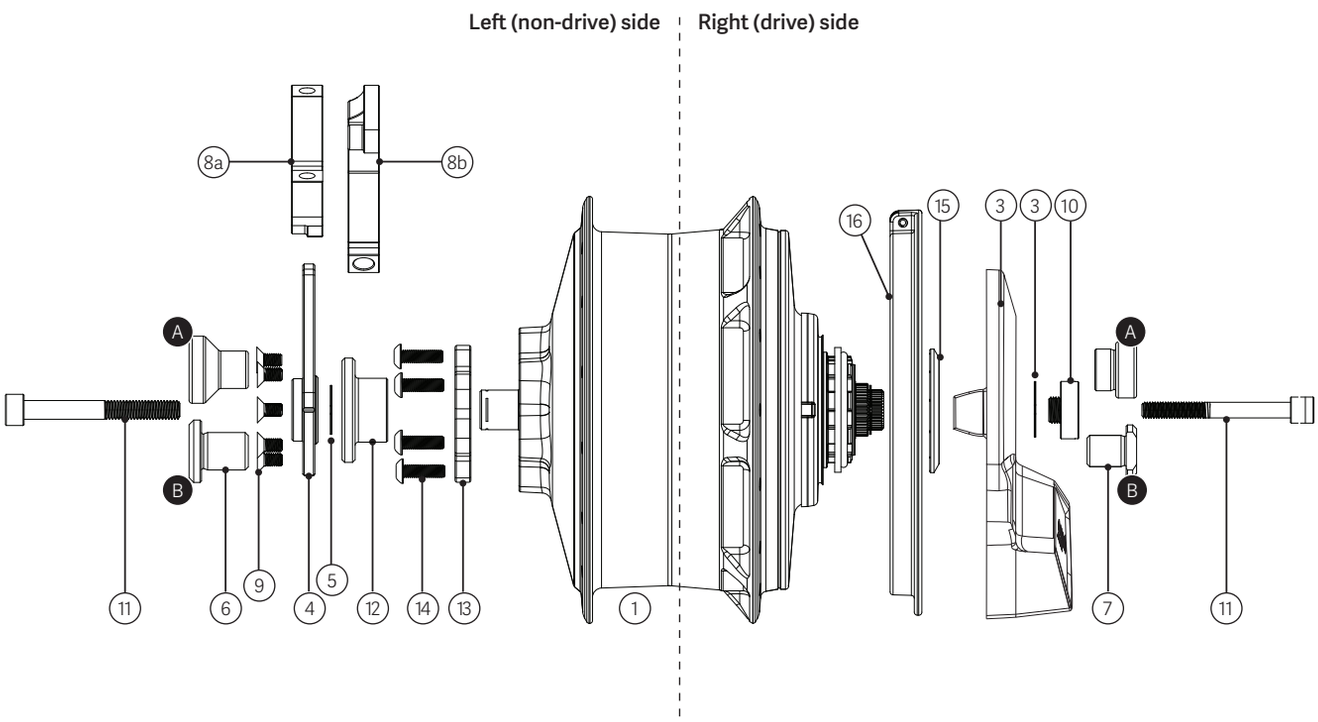

A Syntace
B DT Swiss, Maxle, E-Thru

1 Assembly enviolo SP CVP top level
2 Automatic hub interface
3 Adapter, lock nut, OD20 or OD22, 12 x 142 / 12 x 148 compatible
4 Axle plate, 142/148 mm compatible
5 Retaining ring
6 Spacer, LH

7 Spacer RH
8a Brake caliper mount IS to PM or
8b Brake caliper mount PM to PM
9 Bolt, countersunk, Torx, M4 x 0.7 x 8
10 Washer, spacer, 13 x 19 x 0.5

11 Socket head cap screw, M6
12 Adapter, Torque Reaction Spacer, disc brake, 12 x 148
13 Screw, button head, M5 x 0.8 x
14 16L, alloy
15 Hub encoder
16 Sprocket encoder

CVP with Automatic Hub Interface

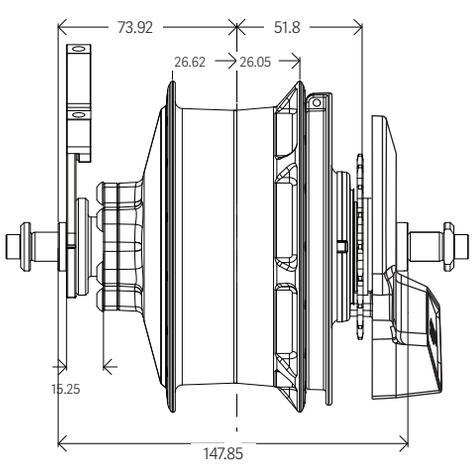

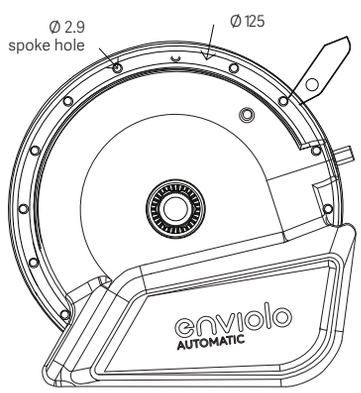

Individual Components

3-Button Controller

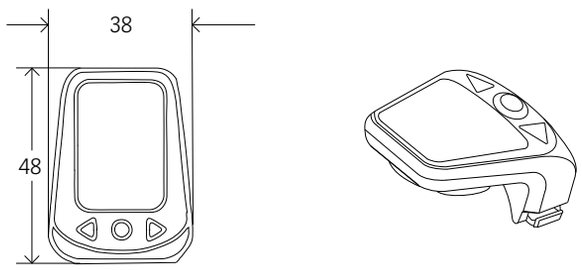

Grip Shifter

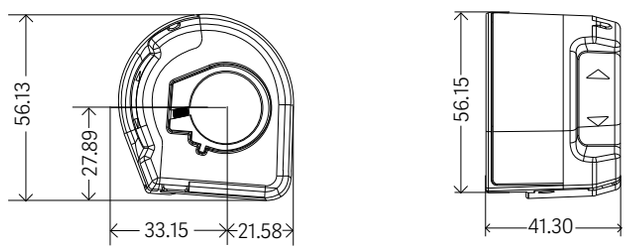

Automatic Hub Interface

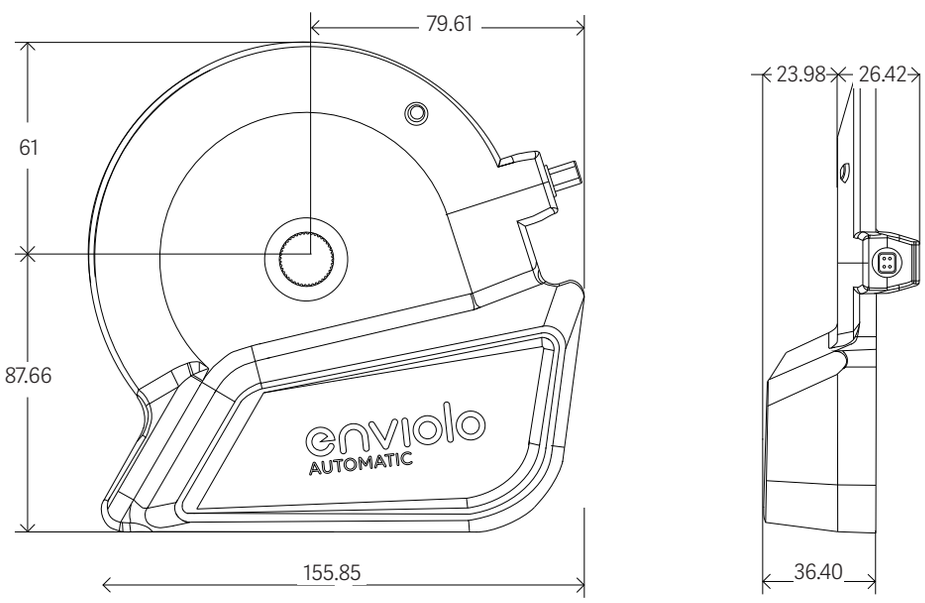

* The 3-button controller is currently under evaluation.

Wire Harness

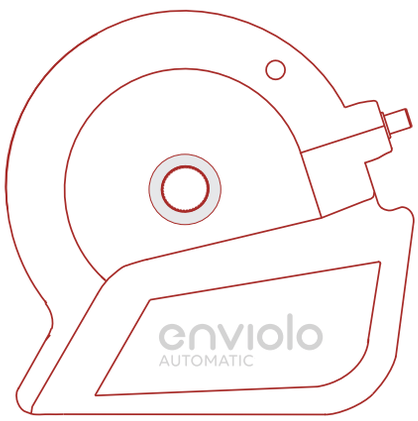

enviolo CT: AHI-AUT-CT-OE
enviolo CO: AHI-AUT-CO-OE
enviolo TR: AHI-AUT-TR-OE
enviolo CA: AHI-AUT-CA-OE
enviolo SP: AHI-AUT-SP-OE

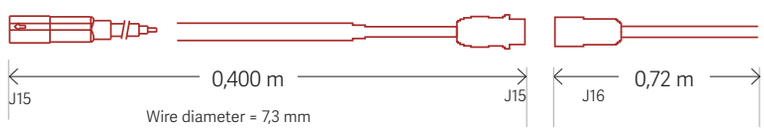

Hirose connector: WIRE-AT-400-OE

Available from drive system manufacturer.

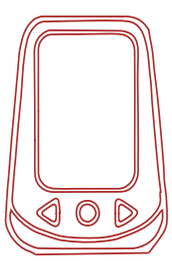

AC-3BUT-BLE-OE

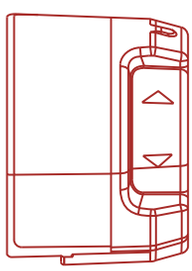

AC-GRIP-BLE-OE

* This connector is only required if the counterplug is not provided by the drive system manufacturer. Bafang, Bosch, Brose and Continental have their own cable solution and therefore don´t require this cable. Please contact the drive system manufacturer for further information. For Yamaha we offer an alternative cable. Please contact the sales team for further information.

enviolo Automatic is a CAN Bus / BLE system

Mini F cable

Hirose cable

Mini F cable

J16

Automatic Wire Harness

This diagram provides you an overview of the system connections.

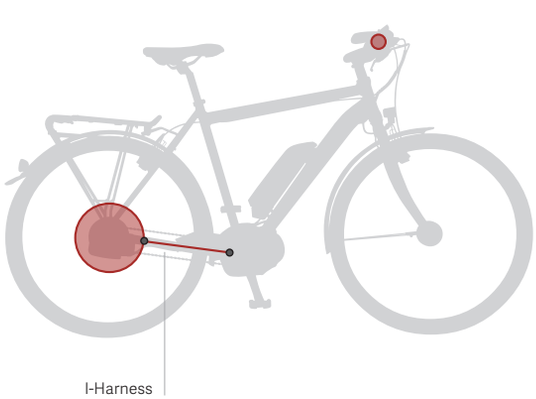

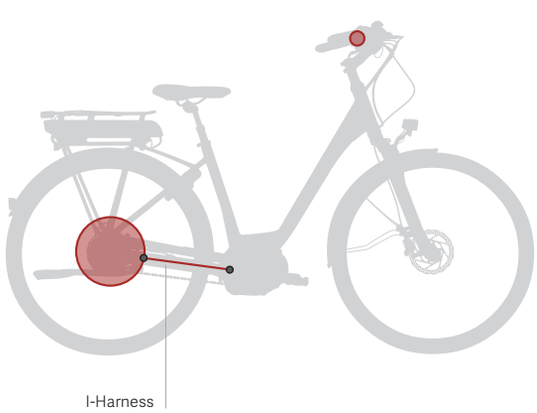

* The 3-button controller is currently under evaluation.

Gear & Sprocket Ratios

Gear Ratio Comparison

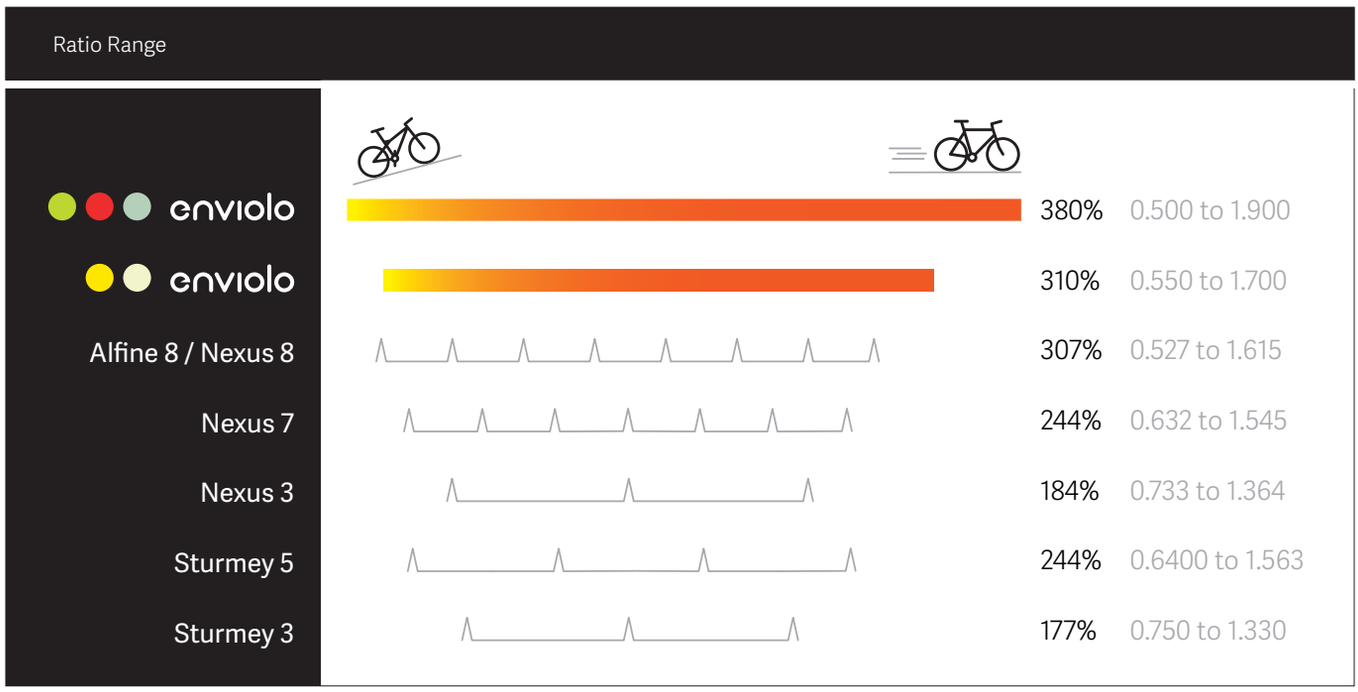

Suggested Sprocket Ratios

To make your choice of gear ratio easier, we have listed some specific recommendations.

However you are free to use any gear ratio, as long as you don't exceed the limits specified on page 33 and 34.

These recommendations do NOT consider internal gearing motor solutions like Bosch Generation 2 (Active, Performance or Performance CX) and MPF.

A gear ratio calculator to help you identify a desired sprocket ratio can be found on enviolo.com

Bikes		
20" Folding Bike / Recumbent	2.8 - 3.0	2.4 - 2.6
26" Commuter Bike / Utility	2.2 - 2.4	2.1 - 2.3
26" MTB / Urban Assault	2.0 - 2.2	1.8 - 2.1
26" Cargo Bike / Utility	2.2 - 2.4	2.1 - 2.3
28" City Bike / Urban	2.0 - 2.2	1.8 - 2.0
700c Commuter Bike / Utility	2.2 - 2.4	2.1 - 2.3
29" MTB / Urban Assault	1.9 - 2.1	1.8 - 2.0

e-Bikes		
20" Folding e-Bike / Recumbent	3.0 - 3.2	2.7 - 2.9
26" Commuter e-Bike / Utility	2.2 - 2.4	2.1 - 2.3
26" e-MTB / Urban Assault	2.3 - 2.5	2.1 - 2.3
26" Cargo e-Bike / Utility	2.2 - 2.4	2.1 - 2.3
28" City e-Bike / Urban	2.1	2.0
700c Commuter e-Bike / Utility	2.2 - 2.4	2.1 - 2.3
29" e-MTB / Urban Assault	2.1	2.0
28" Speed Pedelec / Commuter		2.8 - 3.0

CT TR SP CA CO

enviolo CT, enviolo CO
Approved Gearing

enviolo

Standard front chain ring / sprocket	16	17	18	19	20	21	22	23	24	26	28
58 & higher	3.6	3.4	3.2	3.1	2.9	2.8	2.6	2.5	2.4	2.2	2.1
56	3.5	3.3	3.1	2.9	2.8	2.7	2.5	2.4	2.3	2.2	2.0
54	3.4	3.2	3.0	2.8	2.7	2.6	2.5	2.3	2.3	2.1	1.9
52	3.3	3.1	2.9	2.7	2.6	2.5	2.4	2.3	2.2	2.0	1.9
50	3.1	2.9	2.8	2.6	2.5	2.4	2.3	2.2	2.1	1.9	1.8
48	3.0	2.8	2.7	2.5	2.4	2.3	2.2	2.1	2.0	1.8	1.7
46	2.9	2.7	2.6	2.4	2.3	2.2	2.1	2.0	1.9	1.8	1.6
44	2.8	2.6	2.4	2.3	2.2	2.1	2.0	1.9	1.8	1.7	1.6
42	2.6	2.5	2.3	2.2	2.1	2.0	1.9	1.8	1.8	1.6	1.5
40	2.5	2.4	2.2	2.1	2.0	1.9	1.8	1.7	1.7	1.5	1.4
39	2.4	2.3	2.2	2.1	2.0	1.9	1.8	1.7	1.6	1.5	1.4
38	2.4	2.2	2.1	2.0	1.9	1.8	1.7	1.7	1.6	1.5	1.4
36	2.3	2.1	2.0	1.9	1.8	1.7	1.6	1.6	1.5	1.4	1.3
34	2.1	2.0	1.9	1.8	1.7	1.6	1.5	1.5	1.4	1.3	1.2
33	2.1	1.9	1.8	1.7	1.7	1.6	1.5	1.4	1.4	1.3	1.2
32	2.0	1.9	1.8	1.7	1.6	1.5	1.5	1.4	1.3	1.2	1.1
30	1.9	1.8	1.7	1.6	1.5	1.4	1.4	1.3	1.3	1.2	1.1
28	1.8	1.6	1.6	1.5	1.4	1.3	1.3	1.2	1.2	1.1	1.0
27 & lower	1.7	1.6	1.5	1.4	1.4	1.3	1.2	1.2	1.1	1.0	1.0

Bosch GEN2 front sprocket											
24 & higher	1.50	1.41	1.33	1.26	1.20	1.14	1.09	1.04	1.00	0.92	0.86
23	1.44	1.35	1.28	1.21	1.15	1.10	1.05	1.00	0.96	0.88	0.82
22	1.38	1.29	1.22	1.16	1.10	1.05	1.00	0.96	0.92	0.85	0.79
21	1.31	1.24	1.17	1.11	1.05	1.00	0.95	0.91	0.88	0.81	0.75
20	1.25	1.18	1.11	1.05	1.00	0.95	0.91	0.87	0.83	0.77	0.71
19	1.19	1.12	1.06	1.00	0.95	0.90	0.86	0.83	0.79	0.73	0.68
18	1.13	1.06	1.00	0.95	0.90	0.86	0.82	0.78	0.75	0.69	0.64
17	1.06	1.00	0.94	0.89	0.85	0.81	0.77	0.74	0.71	0.65	0.61
16	1.00	0.94	0.89	0.84	0.80	0.76	0.73	0.70	0.67	0.62	0.57
15	0.94	0.88	0.83	0.79	0.75	0.71	0.68	0.65	0.63	0.58	0.54
14	0.88	0.82	0.78	0.74	0.70	0.67	0.64	0.61	0.58	0.54	0.50
13 & lower	0.81	0.76	0.72	0.68	0.65	0.62	0.59	0.57	0.54	0.50	0.46

Approved for any bicycle (including mid-motor eBikes rated at 250 W or less)
Approved for pedal bicycles and front hub motor eBikes (not approved for mid-motor eBikes)
Not approved for any bicycle

Sprocket Ratio = Front chain ring teeth / Rear sprocket teeth
2.1 minimum sprocket ratio for mid-motor eBikes rated at 250 W or less
1.8 minimum sprocket ratio for all pedal bicycles and front motor eBikes
0.84 minimum sprocket ratio for Bosch GEN2 eBikes rated at 250 W or less

enviolo CT and CO manual and automatic systems are compatible with mid motor eBike systems rated at 250W or less, with approved gearing as shown on this page.

enviolo TR, enviolo SP, enviolo CA
Approved Gearing

enviolo

Standard front chain ring / sprocket	16	17	18	19	20	21	22	23	24	26	28
58 & higher	3.6	3.4	3.2	3.1	2.9	2.8	2.6	2.5	2.4	2.2	2.1
56	3.5	3.3	3.1	2.9	2.8	2.7	2.5	2.4	2.3	2.2	2.0
54	3.4	3.2	3,0	2.8	2.7	2.6	2.5	2.3	2.3	2.1	1.9
52	3.3	3.1	2.9	2.7	2.6	2.5	2.4	2.3	2.2	2.0	1.9
50	3.1	2.9	2.8	2.6	2.5	2.4	2.3	2.2	2.1	1.9	1.8
48	3.0	2.8	2.7	2.5	2.4	2.3	2.2	2.1	2.0	1.8	1.7
46	2.9	2.7	2.6	2.4	2.3	2.2	2.1	2.0	1.9	1.8	1.6
44	2.8	2.6	2.4	2.3	2.2	2.1	2.0	1.9	1.8	1.7	1.6
42	2.6	2.5	2.3	2.2	2.1	2.0	1.9	1.8	1.8	1.6	1.5
40	2.5	2.4	2.2	2.1	2.0	1.9	1.8	1.7	1.7	1.5	1.4
39	2.4	2.3	2.2	2.1	2.0	1.9	1.8	1.7	1.6	1.5	1.4
38	2.4	2.2	2.1	2.0	1.9	1.8	1.7	1.7	1.6	1.5	1.4
36	2.3	2.1	2.0	1.9	1.8	1.7	1.6	1.6	1.5	1.4	1.3
34	2.1	2.0	1.9	1.8	1.7	1.6	1.5	1.5	1.4	1.3	1.2
33	2.1	1.9	1.8	1.7	1.7	1.6	1.5	1.4	1.4	1.3	1.2
32	2.0	1.9	1.8	1.7	1.6	1.5	1.5	1.4	1.3	1.2	1.1
30	1.9	1.8	1.7	1.6	1.5	1.4	1.4	1.3	1.3	1.2	1.1
28	1.8	1.6	1.6	1.5	1.4	1.3	1.3	1.2	1.2	1.1	1.0
27 & lower	1.7	1.6	1.5	1.4	1.4	1.3	1.2	1.2	1.1	1.0	1.0

Bosch GEN2 front sprocket											
24 & higher	1.50	1.41	1.33	1.26	1.20	1.14	1.09	1.04	1.00	0.92	0.86
23	1.44	1.35	1.28	1.21	1.15	1.10	1.05	1.00	0.96	0.88	0.82
22	1.38	1.29	1.22	1.16	1.10	1.05	1.00	0.96	0.92	0.85	0.79
21	1.31	1.24	1.17	1.11	1.05	1.00	0.95	0.91	0.88	0.81	0.75
20	1.25	1.18	1.11	1.05	1.00	0.95	0.91	0.87	0.83	0.77	0.71
19	1.19	1.12	1.06	1.00	0.95	0.90	0.86	0.83	0.79	0.73	0.68
18	1.13	1.06	1.00	0.95	0.90	0.86	0.82	0.78	0.75	0.69	0.64
17	1.06	1.00	0.94	0.89	0.85	0.81	0.77	0.74	0.71	0.65	0.61
16	1.00	0.94	0.89	0.84	0.80	0.76	0.73	0.70	0.67	0.62	0.57
15	0.94	0.88	0.83	0.79	0.75	0.71	0.68	0.65	0.63	0.58	0.54
14	0.88	0.82	0.78	0.74	0.70	0.67	0.64	0.61	0.58	0.54	0.50
13 & lower	0.81	0.76	0.72	0.68	0.65	0.62	0.59	0.57	0.54	0.50	0.46

Approved for any bicycle (including mid-motor eBikes)
Approved for pedal bicycles and front hub motor eBikes (not approved for mid-motor eBikes)
Not approved for any bicycle

Sprocket Ratio = Front chain ring teeth / Rear sprocket teeth
2.0 minimum sprocket ratio for mid-motor eBikes
1.8 minimum sprocket ratio for all pedal bicycles and front motor eBikes
0.80 minimum sprocket ratio for Bosch GEN2 eBikes

enviolo TR, SP and CA manual and automatic systems are compatible with mid motor eBike systems with approved gearing as shown on this page.

Max power limits can be taken from chart "Groupset Power Limits" on page 10.

Further Information

System Efficiency

Besides the components themselves several other factors influence the battery range:

- Type of tires
- Tire pressure
- Riding at high assistance levels
- Rider and vehicle weight
- High carry-on weight
- Straight sitting position
- Headwind
- Topograhpy
- Frequent starting and stopping
- Frequent riding under 20 km/h
- Frequent riding under 50 RPM
- Low pedaling force by rider
- Low outside temperatures
- Rider cadence

Service Tools

To support your assembly and maintenance of our products we offer three simple service tools:

BK-ADPT-TOOL
Brake adapter / disc assembly

HW-SNUT-TOOL
Spline nut tool

CE-HW-TOOL-SM-MLD
Cable hardware installation tool

CE-HW-TOOL-LG-CNC
Cable hardware installation tool

enviolo Automatic App

Web download
of software and manuals through:

support.enviolo.com

Wireless
connection

Operates via BLE
connection from hub
interface to
smartphone/tablet

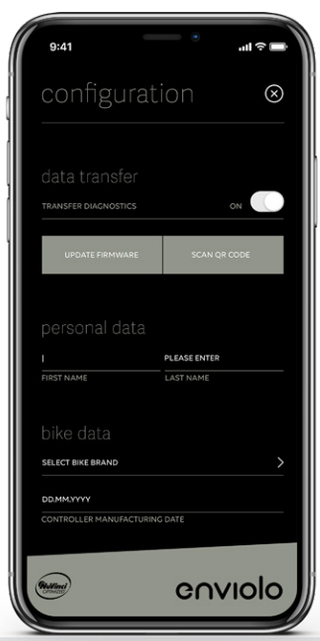

Update enviolo
Automatic firmware

Program correct cadence
and bicycle settings

The AHI to Smartphone or tablet connection lets you use our app to configure the automatic shifting units for various applications. For further information please also view our app manual.

Assembly
Torque Specifications

Torque Specs enviolo CT, enviolo TR, enviolo CO, enviolo CA		Other Parts	
Axle nuts	30 - 40 Nm	Cable hardware	1.5 - 2.0 Nm
Brake adapter + Loctite® 277 or similar	55 - 65 Nm	Controller	2.0 - 2.5 Nm
Interface locknut	10 - 15 Nm	Output speed ring	1.0 Nm
Spline nut	9 - 10 Nm	Controller cable cover screw	0.2 - 0.3 Nm (handtight)

Torque Specs enviolo SP (135 mm)		enviolo SP (142/148 mm)	
Torque adapter screws	2.5 - 3 Nm	Torque adapter screws	2.5 - 3 Nm
Double threaded axle adapters	10 - 15 Nm	Interface adapter	10 - 15 Nm
Axle nuts	30 - 40 Nm	Dropout adapter (not threaded in all cases)	5 - 10 Nm
		Axle bolts	10 - 15 Nm

Quality & Validation

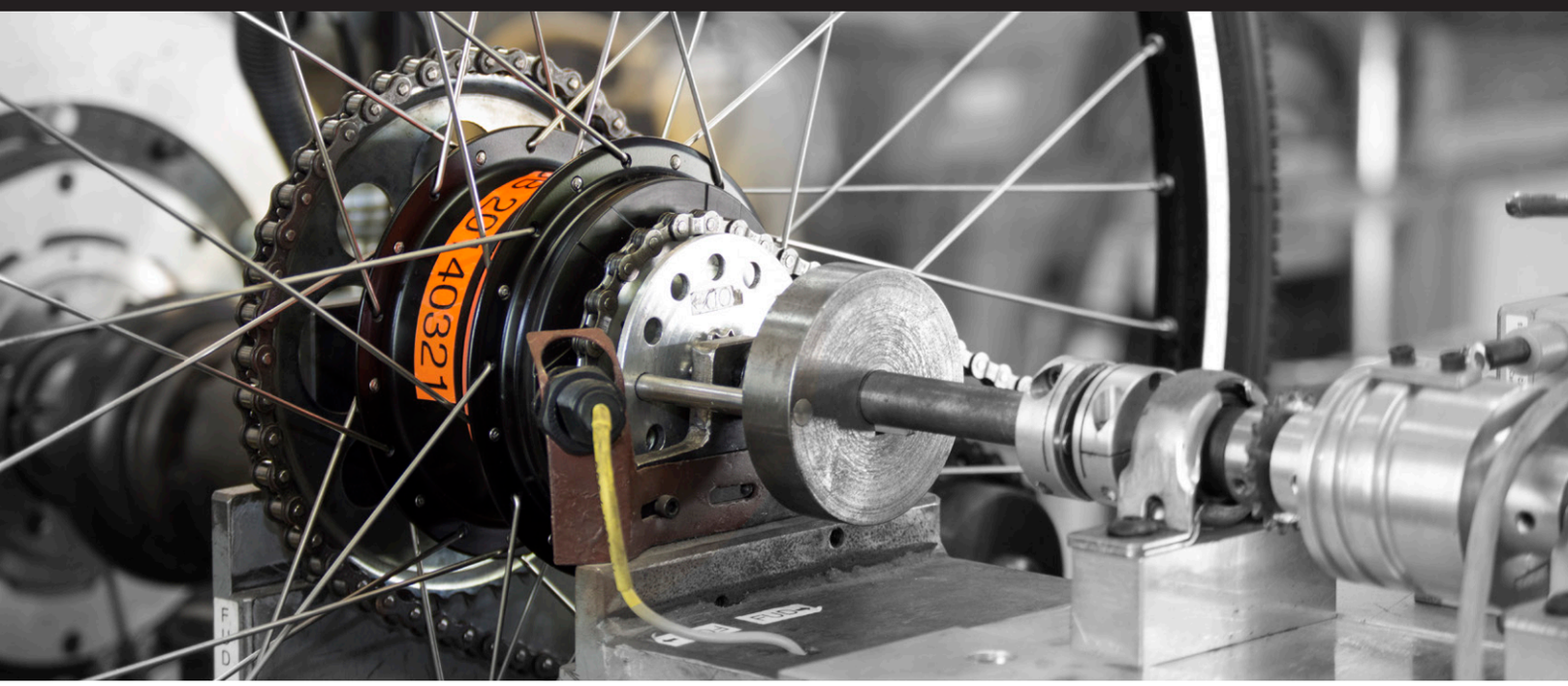

Before we release our products to the market they have to run through a severe testing cycle, which is derived from automotive standards and includes an FMEA and functional safety analysis.

In addition all our products complete an extensive end-of-line testing and validation process.

Build quality

- Ride audit (quantity & quality)
- Ratio range
- R&D function
- Assembly tolerances

Design & overload tests

- Cold temperature operation test
- Torsional stress (DIN) test
- Wheel retention test
- Spoke flange ultimate load test
- Pedal drag test

Durability / fatigue tests

- Distributed fixed-ratio test (DFRT)
- Dynamic shift test (DST)
- Coasting test
- Canted wheel bump test
- Hub shell & cover fatigue test
- Spoke flange fatigue test
- Brake ultimate load & fatigue test
- Shifter system life test

Environmental tests

- Corrosion (salt spray) test
- UV test
- Environmental intrusion test
- Durability

Production Line Testing

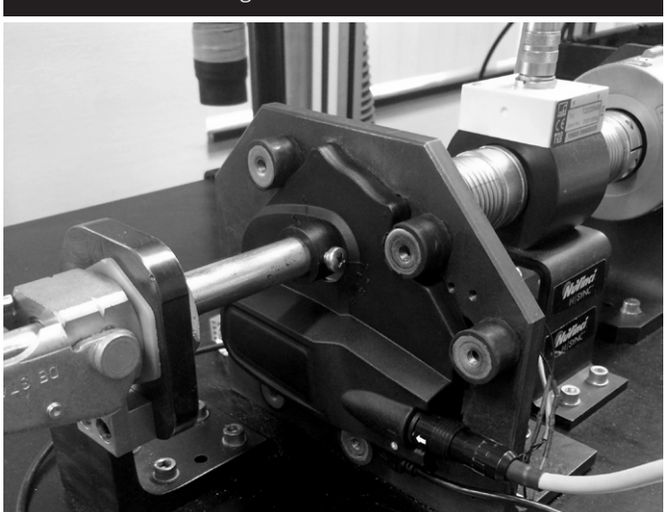

End-of-Line Testing

Cooperation Partners

Current Partners

To support the trend of system integration we cooperate with the leading drive system manufacturers to offer an integrated shift system and with the market leaders in the zero-maintenance belt drive supply chain.

enviolo AUTOMATIC

ACCELL GROUP

BAFANG

BMZ THE BATTERY EXPERTS

epowered by BOSCH

brose

Continental

impulse

YAMAHA

TranzX

enviolo AUTOMATIC

- integrated in controller

BLOKS

epowered by BOSCH

VISIOBIKE

FLYER Innovation in Mobility

MPF DRIVE

PIAGGIO

Gates
Belt Drive Specifications

enviolo

Gates CARBON DRIVE™

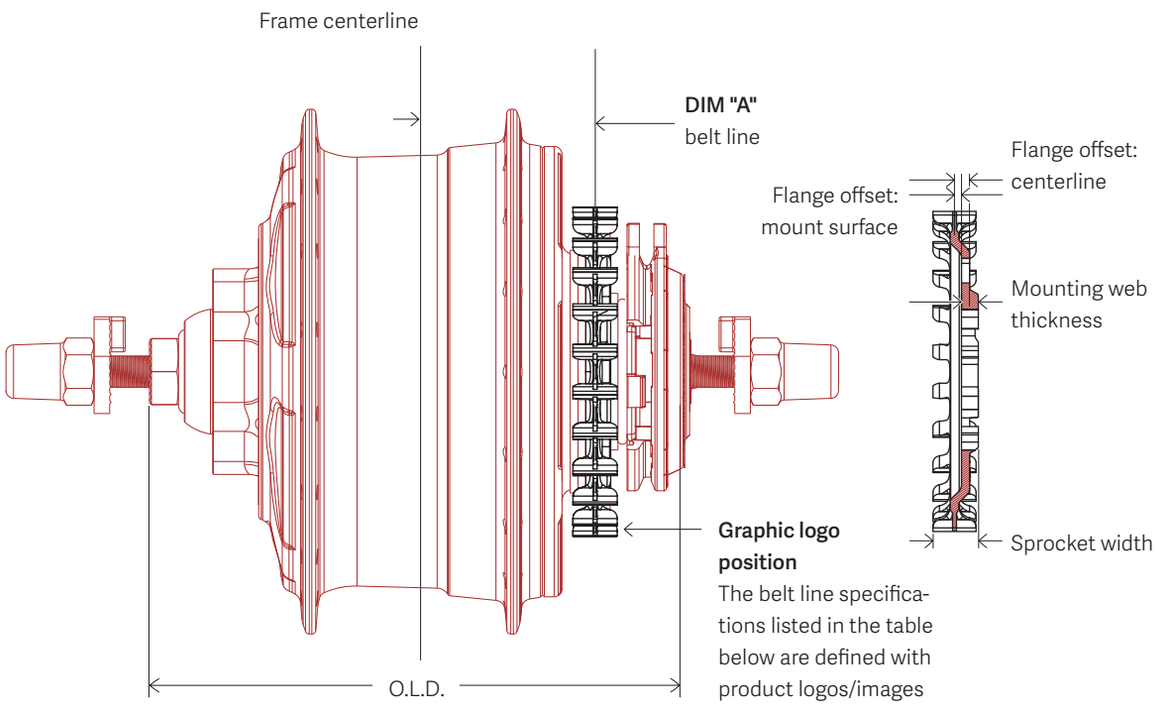

The belt line specifications listed in the table below are defined with product logos/images on rear sprockets facing outward, away from frame centerline.

CDX Beltline

enviolo CT, enviolo TR, enviolo SP*, enviolo CA*, enviolo CO

* 135 / 142 mm only

Teeth	DIM "A" belt line	Tooth outer diameter	Sprocket width	Mounting web thickness	Article number
22	45.5 mm	75.30 mm	11.6 mm	4.3 mm	CT1122VMN
24	45.5 mm	82.26 mm	11.6 mm	4.3 mm	CT1124VMN
26	45.5 mm	89.31 mm	11.6 mm	4.3 mm	CT1126VMN
28	45.5 mm	96.31 mm	11.6 mm	4.3 mm	CT1128VMN
enviolo SP**					** 148 mm only
22	48.7 mm		11.6 mm	4.3 mm	
24	48.7 mm	82.26 mm	11.6 mm	4.3 mm	CT1124VMN
26	48.7 mm	89.31 mm	11.6 mm	4.3 mm	CT1126VMN
28	48.7 mm	96.31 mm	11.6 mm	4.3 mm	CT1128VMN

Compatible Chain Cases

Hebie
Chain Case

350R N16

350R NV16

Chainglider

enviolo CT, enviolo TR, enviolo SP, enviolo CA, enviolo CO

Compatible systems	Front part	Rear part	Chainstay length	Compatible sprocket size
Manual	350F 38 / 42 / 44 / 48	350R NV16	445 - 475mm	16 - 22
Manual	350F 38L / 42L / 44L / 48L	350R NV16	530 mm	16 - 22

*MY2020 Automatic option in evaluation.

Hesling
Chain Case

Cadena

enviolo CT, enviolo TR, enviolo SP, enviolo CA, enviolo CO

Compatible systems	Chainstay length	Compatible front sprocket size	Compatible rear sprocket size
Manual	460 - 500 mm	18 - 22	18 - 22

*MY2020 Automatic option in evaluation.

Hesling
Chain Case

Finura

enviolo CT, enviolo TR, enviolo SP, enviolo CA, enviolo CO

Compatible systems	Chainstay length	Compatible front sprocket size	Compatible rear sprocket size
Manual	450 - 490 mm	38	18 - 22

*MY2020 Automatic option in evaluation.

Hesling
Chain Case

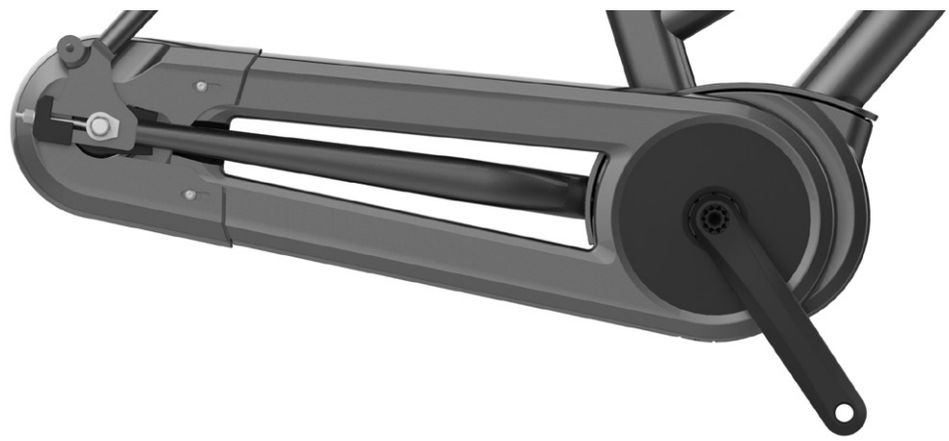

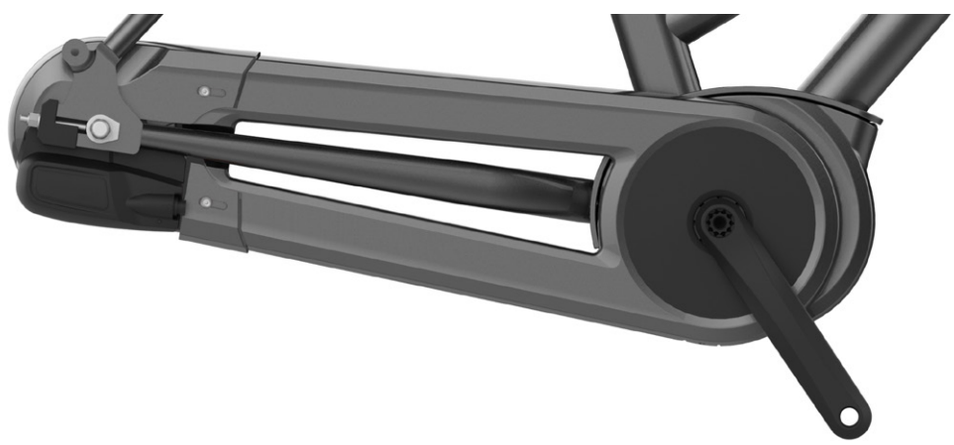

Ride 5, 6, 7 and 8

enviolo CT, enviolo TR, enviolo SP, enviolo CA, enviolo CO

Compatible systems	Case	Chainstay length	Compatible front sprocket size	Compatible rear sprocket size
Manual	Ride 5	460 - 500 mm	38	18 - 22
Manual	Ride 6	500 - 530 mm	38	18 - 22

*MY2020 Automatic option in evaluation.

Compatible Bicycle Trailers

Bike Trailer Adapters for enviolo CT, enviolo TR, enviolo CO enviolo SP (Solid Axle), enviolo CA

enviolo

BURLEY®

Trailer	Adapter
Minnow, Bee, Honey Bee, Encore, Solo, Cub, D'Lite, Nomad, Flatbed, Tail Wagon	Art. No. 960038

CROOZER® The bicycle trailer

Trailer	For vehicles from 2016	For vehicles from 2016	For vehicles before 2016
Croozer Kid Croozer Kid Plus Croozer Cargo Croozer Dog	Art. No. 122003516	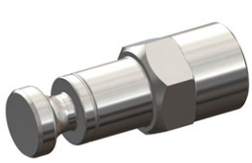 XL: + 10 mm Art. No. 122003716	Art. No. 122000715

THULE® SWEDEN

Trailer	Adapter
Thule Chariot Lite Thule Chariot Cab Thule Chariot Cross Thule Chariot Sport Thule Coaster XT	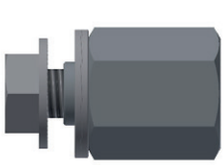 Art. No. 20100798

Use of third party adapters has not been tested by Fallbrook Technologies Inc. and therefore we cannot guarantee their performance or safety and hereby disclaim any liability resulting from their use. Please carefully follow all installation instructions provided by third party product producers for the installation and maintenance of such products.

Certificates & Declarations

Test Report

Test:	European Bicycle Standards (Rear Hub Durability and Strength Criteria)
Test Articles:	CVP's: enviolo CT, enviolo CO, enviolo TR, enviolo CA, enviolo SP Shifters: enviolo CT, enviolo CO, enviolo TR, enviolo CA, enviolo SP
Date:	5 DEC 2017
Reference:	ISO 4210:2014(E) which supersedes: • EN 14764:2005 • EN 14766:2005 • CEN/TC 333 N.96:2002 • DIN 79100-2:1999 ISO 8098:2014(E), US CPSC 16 CFR Part 1512
Test Method:	Reference standard tests specific to rear hub durability and strength criteria
Test Location:	Fallbrook Technologies Inc., Cedar Park, TX

Test Results:
The enviolo CT, enviolo CO, enviolo TR, enviolo CA, enviolo SP are tested to industry standards for internal hubs, as well as proprietary additional tests specific to NuVinci technology in use with traditional, as well as electric- assist bicycles (eBikes or pedelecs) up to 250W (rated) power for the enviolo CT, enviolo CO, enviolo TR and up to 500W (rated) power for the enviolo CA, enviolo SP.

Specifically, the enviolo CT, enviolo CO, enviolo TR, enviolo CA, enviolo SP meet rear hub durability and strength criteria for bicycle standard ISO 4210:2014(E) and ISO 8098:2014(E). The enviolo CT, enviolo CO, enviolo TR, enviolo CA, enviolo SP shifters comply with requirements set forth in ISO 4210:2014(E) and ISO 8098:2014(E). In addition, the enviolo CT, enviolo CO, enviolo TR, enviolo CA, enviolo SP hubs and enviolo CT, enviolo CO, enviolo TR, enviolo CA, enviolo SP shifters meet US CPSC 16 CFR Part 1512.

Proprietary Fallbrook Technologies Inc. testing that exceeds industry standards include:

- Durability (simulating 18,000 km of use at extreme conditions)
- Dynamic Shift Test
- Canted Wheel Bump Fatigue Test
- Coasting Fatigue Test
- Hub Shell and Cover Axial Fatigue Test
- Hub Shell spoke Flange Fatigue and Ultimate Tests
- Brake Fatigue Test
- Shifter System Durability Test
- Corrosion Resistance Test
- Weatherability / UV Test
- Environmental Intrusion Test
- Ride Audit Test (including cold weather testing)
- End of Line Efficiency, Ratio Range, and Leak Tests

Rev C

© 2017 Fallbrook Intellectual Property Company LLC. enviolo, NuVinci® and its logo are registered trademarks and NuVinci Optimized™, Nfinity™, Harmony™, Harmony H|Sync™, together with their logos and elements, are unregistered trademarks, in each case of Fallbrook Intellectual Property Company LLC, used under license. All rights reserved.

Certificate of Compliance – RoHS Declaration

Fallbrook Technologies Inc.
505 Cypress Creek Road, Suite L
Cedar Park, TX 78613

12/05/17

Fallbrook Technologies certifies product compliance to the European Union Directive 2011/65/EU on the Restriction of the use of certain Hazardous Substances in electrical and electronic equipment (RoHS).

All enviolo automatic brand system components comply with the stated substances and maximum concentration values tolerated by weight in homogeneous materials.

Lead (0,1 %)
Mercury (0,1 %)
Cadmium (0,01 %)
Hexavalent chromium (0,1 %)
Polybrominated biphenyls (PBB) (0,1 %)
Polybrominated diphenyl ethers (PBDE) (0,1 %)

Fallbrook Technologies relies on its supply chain partners to ensure daily compliance.

VP of Operations

© 2017 Fallbrook Intellectual Property Company LLC. enviolo, NuVinci® and its logo are registered trademarks and NuVinci Optimized™, Nfinity™, Harmony™, Harmony H|Sync™, together with their logos and elements, are unregistered trademarks, in each case of Fallbrook Intellectual Property Company LLC, used under license. All rights reserved.

Declaration of Conformity

Manufacturer:

Fallbrook Technologies Inc.
505 Cypress Creek Road, Suite L
Cedar Park, TX 78613

Authorized Representative:

Richard Hilgart
Fallbrook Technologies Inc.
Technical Product Manager
Popovstraat 12
8013 RK Zwolle, The Netherlands

Product Name: enviolo Automatic and Automatic + Shifting System with belt drive compatibility. The enviolo Automatic and Automatic + Shifting System with belt drive compatibility consists of the following components:

(1) enviolo Automatic Hub Interface ("AHI-AUT"), enviolo Automatic + Hub Interface ("AHI-AUTI"); (2) "Y" or "i" Harness, and (3) may include Grip shifter Controller ("ARC") or 3-button controller. A picture of the enviolo Automatic Shifting System is attached as Exhibit A.

The object of declaration described above is in conformity with Directive 2004/108/EC of the European Parliament and the Council of 15 December 2004 on the approximation of the laws of the Member States relating to electromagnetic compatibility.

Testing Body: VDE Testing Certification Institute
Merianstrasse 28
63069 Offenbach
Notified Body No.: 0366

Date of Conformity: 1 September 2016

This declaration is issued under the sole responsibility of the Manufacturer and Authorized Representative described above.

Signed for on behalf of Fallbrook Technologies Inc.:

Richard Hilgart
Technical Product Manager

Exhibit A

B35H-HARM-06 | Rev C

© 2017 Fallbrook Intellectual Property Company LLC. enviolo, NuVinci® and its logo are registered trademarks and NuVinci Optimized™, Nfinity™, Harmony™, Harmony H|Sync™, together with their logos and elements, are unregistered trademarks, in each case of Fallbrook Intellectual Property Company LLC, used under license. All rights reserved.

REACh (Regulation, Evaluation, and Authorization of Chemicals) Declaration:

Fallbrook Technologies Inc.
505 Cypress Creek Road, Suite L
Cedar Park, TX 78613

Effective Date: October 20, 2015

Supplier Declaration for Articles Provided

We declare that this information is true and complete to the best of our knowledge and that the articles we provide are compliant with restrictions on substances listed in Annex XVII of REACh regulations (15.06.2015). As a Non-EU company, we do not have a direct REACh obligation but we do verify compliance with Annex XVII to allow our customers to fulfill their REACh obligations. Fallbrook Technologies does not manufacture "substances" or "preparations" nor do we provide articles that involve the "intentional release of substances" per the definitions in Regulation (EC) No 1907/2006 – REACH.

VP of Operations

© 2017 Fallbrook Intellectual Property Company LLC. enviolo, NuVinci® and its logo are registered trademarks and NuVinci Optimized™, Nfinity™, Harmony™, Harmony H|Sync™, together with their logos and elements, are unregistered trademarks, in each case of Fallbrook Intellectual Property Company LLC, used under license. All rights reserved.

Support & Service
support.enviolo.com

enviolo

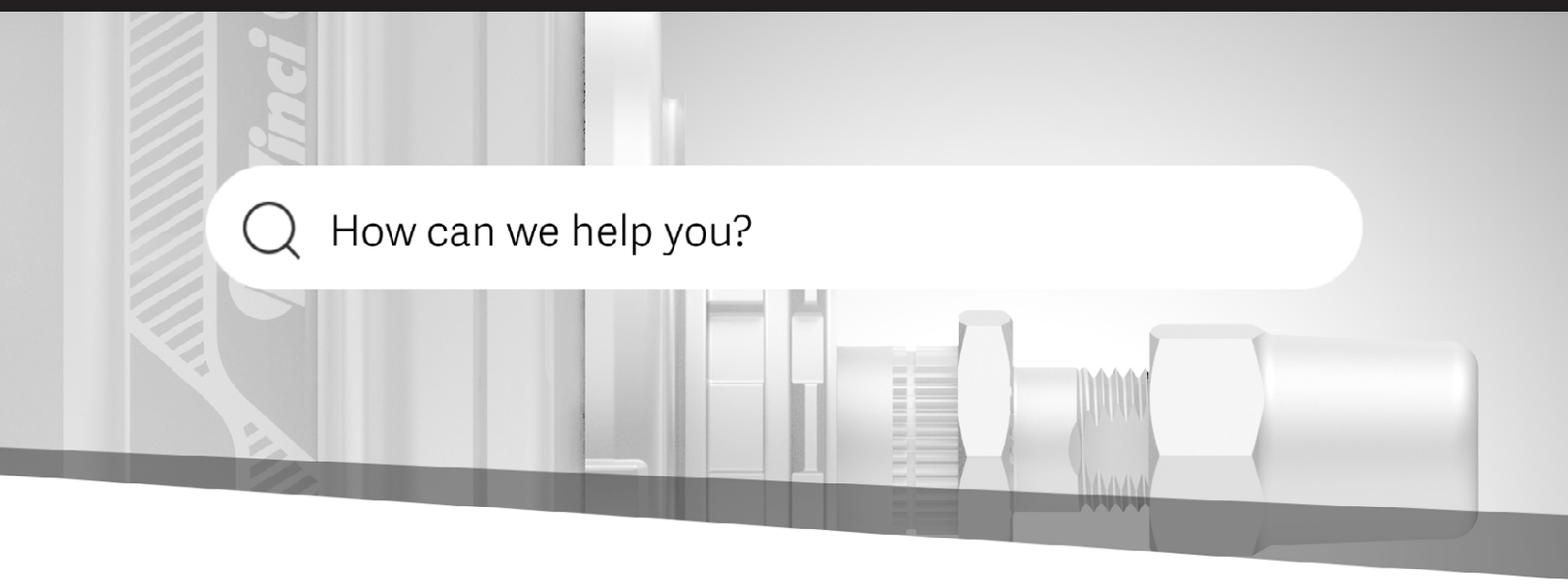

Most Read Articles

Resolve Stuck CVP
Manuals & Technical Documentation

Article created 4 mins ago 0

Resetting the CVP to Full Overdrive
Manuals & Technical Documentation

Article created 4 mins ago 0

Installation of Freewheel
Manuals & Technical Documentation

Article created 4 mins ago 0

See More

Intellectual Property Notice

© 2018 Fallbrook Intellectual Property Company LLC. enviolo and its logo are registered trademarks and NuVinci Optimized™, together with its logos and elements, are unregistered trademarks, in each case of Fallbrook Intellectual Property Company LLC, used under license. All rights reserved.